Plug-in Type
Digital Indicating Turbidity/SS Meter
WIL-101-TU

Instruction Manual

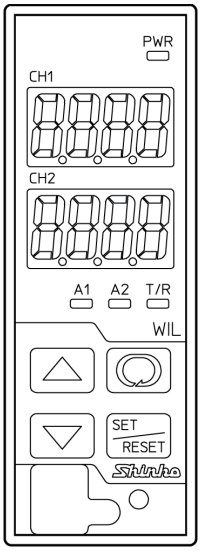

Shinko

Preface

Thank you for purchasing our WIL-101-TU, Plug-in Type Digital Indicating Turbidity/SS (Suspended Solids) Meter.

This manual contains instructions for the mounting, functions, operations and notes when operating the WIL-101-TU. To ensure safe and correct use, thoroughly read and understand this manual before using this instrument.

To prevent accidents arising from the misuse of this instrument, please ensure the operator receives this manual.

Characters Used in This Manual

Indication	-1	0	1	2	3	4	5	6	7	8	9	℃	℉
Number, ℃/℉	-1	0	1	2	3	4	5	6	7	8	9	℃	℉
Indication	A	b	c	d	E	F	G	H	I	J	k	L	m
Alphabet	A	B	C	D	E	F	G	H	I	J	K	L	M
Indication	n	o	P	q	r	s	T	U	v	w	x	y	z
Alphabet	N	O	P	Q	R	S	T	U	V	W	X	Y	Z

⚠ Caution

- This instrument should be used in accordance with the specifications described in the manual.
  If it is not used according to the specifications, it may malfunction or cause a fire.
- Be sure to follow all of the warnings, cautions and notices. If they are not observed, serious injury or malfunction may occur.
- The contents of this instruction manual are subject to change without notice.
- Care has been taken to ensure that the contents of this instruction manual are correct, but if there are any doubts, mistakes or questions, please inform our sales department.
- This instrument is designed to be installed on a DIN rail within a control panel. If it is not, measures must be taken to ensure that the operator cannot touch power terminals or other high voltage sections.
- Any unauthorized transfer or copying of this document, in part or in whole, is prohibited.
- Shinko Technos Co., Ltd. is not liable for any damage or secondary damage(s) incurred as a result of using this product, including any indirect damage.

Safety Precautions (Be sure to read these precautions before using our products.)

The safety precautions are classified into 2 categories: “Warning” and “Caution”.
Depending on the circumstances, procedures indicated by ⚠ Caution may result in serious consequences, so be sure to follow the directions for usage.

⚠ Warning Procedures which may lead to dangerous conditions and cause death or serious injury, if not carried out properly.

⚠ Caution Procedures which may lead to dangerous conditions and cause superficial to medium injury or physical damage or may degrade or damage the product, if not carried out properly.

⚠ Warning

- To prevent an electrical shock or fire, only Shinko or other qualified service personnel may handle the inner assembly.
- To prevent an electrical shock, fire or damage to the instrument, parts replacement may only be undertaken by Shinko or other qualified service personnel.

⚠ SAFETY PRECAUTIONS

- To ensure safe and correct use, thoroughly read and understand this manual before using this instrument.
- This instrument is intended to be used for measuring equipment. Verify correct usage after purpose-of-use consultation with our agency or main office. (Never use this instrument for medical purposes with which human lives are involved.)
- External protection devices such as protective equipment against excessive temperature rise, etc. must be installed, as malfunction of this product could result in serious damage to the system or injury to personnel. Proper periodic maintenance is also required.
- This instrument must be used under the conditions and environment described in this manual. Shinko Technos Co., Ltd. does not accept liability for any injury, loss of life or damage occurring due to the instrument being used under conditions not otherwise stated in this manual.

⚠ Caution with Respect to Export Trade Control Ordinance

To avoid this instrument from being used as a component in, or as being utilized in the manufacture of weapons of mass destruction (i.e. military applications, military equipment, etc.), please investigate the end users and the final use of this instrument. In the case of resale, ensure that this instrument is not illegally exported.

PRECAUTIONS

1. Installation Precautions

⚠ Caution

This instrument is intended to be used under the following environmental conditions (IEC61010-1):

- Overvoltage category Ⅱ, Pollution degree 2

Ensure the mounting location corresponds to the following conditions:

- A minimum of dust, and an absence of corrosive gases
- No flammable, explosive gases
- No mechanical vibrations or shocks
- No exposure to direct sunlight, an ambient temperature of 0 to 50℃ (32 to 122℉) that does not change rapidly, and no icing
- An ambient non-condensing humidity of 35 to 85 %RH
- No large capacity electromagnetic switches or cables through which large current is flowing.
- No water, oil, chemicals or the vapors of these substances can come into direct contact with the unit.
- If the WIL-101-TU is installed within a control panel, the ambient temperature of the unit – not the ambient temperature of the control panel – must be kept under 50℃. Otherwise the life of electronic parts (especially electrolytic capacitors) of the unit will be shortened.

Note: Do not install this instrument on or near flammable material even though the case of this instrument is made of flame-resistant resin.

2. Wiring Precautions

⚠ Caution

- Do not leave wire remnants in the instrument, as they could cause a fire or a malfunction.
- Use a solderless terminal with an insulation sleeve in which the M3 screw fits when wiring the WIL-101-TU.
- Tighten the terminal screw using the specified torque. If excessive force is applied to the screw when tightening, the terminal screw may be damaged.
- This instrument does not have a built-in power switch, circuit breaker and fuse.
  It is necessary to install a power switch, circuit breaker and fuse near the instrument.
  (Recommended fuse: Time-lag fuse, rated voltage 250 V AC, rated current 2 A)
- For a 24 V AC/DC power source, do not confuse polarity when using direct current (DC).
- Do not apply a commercial power source to the Turbidity/SS Sensor which is connected to the input terminal nor allow the power source to come into contact with the sensor.
- Use the Turbidity/SS Sensor made by OPTEX Co., Ltd.
- Keep the input wires and power lines separate.

3. Operation and Maintenance Precautions

⚠ Caution

- Do not touch live terminals. This may cause an electrical shock or problems in operation.
- Turn the power supply to the instrument OFF when retightening the terminal or cleaning.
  Working on or touching the terminal with the power switched ON may result in severe injury or death due to electrical shock.
- Use a soft, dry cloth when cleaning the instrument.
  (Alcohol based substances may tarnish or deface the unit.)
- As the display section is vulnerable, be careful not to put pressure on, scratch or strike it with a hard object.

Contents

Page

1. Model 7
   1.1 Model 7
   1.2 How to Read the Model Label 7
2. Names and Functions of Instrument 8
3. Mounting to the Control Panel 9
   3.1 Site Selection 9
   3.2 External Dimensions (Scale: mm) 9
   3.3 Mounting 9
4. Removal 11
5. Wiring 12
   5.1 Lead Wire Solderless Terminal 12
   5.2 Terminal Arrangement 13
   5.3 Wire the Communication Line 14
6. Outline of Key Operation and Setting Groups 15
   6.1 Outline of Key Operation 15
   6.2 Setting Groups 15
7. Key Operation Flowchart 16
8. Setup 18
   8.1 Turn the Power Supply to the WIL-101-TU ON 18
   8.2 Turbidity/SS Input Function Group 18
   8.3 Output Function Group 21
   8.4 Basic Function Group 28
9. Calibration 32
   9.1 Turbidity/SS Sensor Calibration Mode 32
      9.1.1 Turbidity/SS Sensor Calibration 32
      9.1.2 Errors when Calibrating Turbidity/SS Sensor 33
   9.2 Zero and Span Output Signal Adjustment Modes 33
      9.2.1 Adjusting Zero and Span Output Signals 33
      9.2.2 Errors when Adjusting Zero and Span Output Signals 34
   9.3 Transmission Output Adjustment Mode 35
10. Measurement 36
   10.1 Starting Measurement 36
   10.2 A□□ Output 36
   10.3 Errors during Measurement 37
11. Communication 38
   11.1 System Configuration Example 38
   11.2 Setting Method of This Instrument 38
   11.3 Communication Procedure 39
   11.4 Shinko Protocol 40
      11.4.1 Transmission Mode 40
      11.4.2 Command Configuration 40
      11.4.3 Checksum Calculation 41
   11.5 MODBUS Protocol 42
      11.5.1 Transmission Mode 42
      11.5.2 Data Communication Interval 42
      11.5.3 Message Configuration 42
      11.5.4 Message Example 44
   11.6 Communication Command Table 46
      11.6.1 Notes about Setting/Reading Command 46
      11.6.2 Setting/Reading Command 47
      11.6.3 Read Only Command 50

11.7 Calibration and Transmission Output Adjustment via Communication Command 52
11.7.1 Turbidity/SS Sensor Calibration Mode 52
11.7.2 Zero and Span Output Signal Adjustment Modes 53
11.7.3 Transmission Output Adjustment Mode 54
11.8 Notes on Programming Monitoring Software 55
11.8.1 How to Speed up the Scan Time 55
11.8.2 How to Read the Set Value Changes Made by Front Keypad Operation 55
11.8.3 Note when Sending All Set Values at One Time 55
12. Specifications 56
12.1 Standard Specifications 56
12.2 Optional Specifications 60
13. Troubleshooting 62
13.1 Error Codes 62
13.2 Solutions to Problems 62
13.2.1 Indication 62
13.2.2 Key Operation 64
13.2.3 Communication 64
14. Character Tables 65

1. Model

1.1 Model

W I L - 1 0	1	-TU		, □□□	
Input points	1				1 point
Input		TU			Turbidity Sensor (made by OPTEX): TC-100, TC-500, TC-3000 SS (Suspended Solids) Sensor (made by OPTEX): TCS-1000(E), TS-MxS-A
Power supply voltage					100 to 240 V AC (standard)
			1		24 V AC/DC (*)
Option				EVT	A□□ output (A11, A12, A21, A22)
				TA	Transmission output

(*) Power supply voltage 100 to 240 V AC is standard.
When ordering 24 V AC/DC, enter “1” in Power supply voltage, after ‘TU’.

1.2 How to Read the Model Label

The model label is attached to the left side of the case.

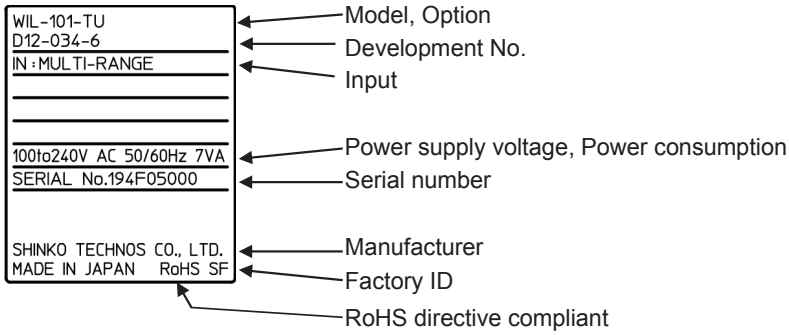

(Fig. 1.2-1)

2. Names and Functions of Instrument

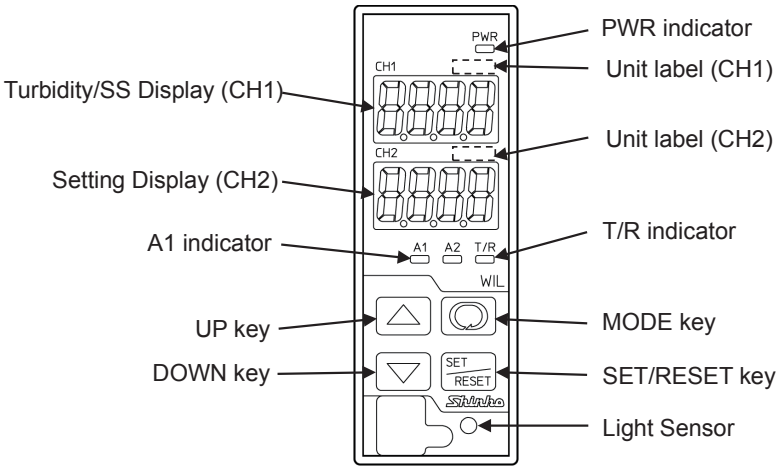

(Fig. 2-1)

Displays

Turbidity/SS Display (CH1)	In Turbidity/SS Display Mode, Turbidity/SS input value is indicated in red. In Setting mode, characters are indicated in red.
Setting Display (CH2)	In Turbidity/SS Display Mode, items selected in [Display selection (p.30)] are indicated in red. In Setting mode, set values (or selected items) are indicated in red.

Unit Label

Unit label (CH1)	Attach the user's unit of Turbidity/SS Display (CH1) from the included unit labels if necessary.
Unit label (CH2)	Attach the user's unit of Setting Display (CH2) from the included unit labels if necessary.

Action Indicators

PWR indicator	When power supply to the instrument is turned ON, the yellow LED lights up.
A1 indicator	When A1 output (Contact output 1) is ON, the red LED lights up.
T/R indicator	The yellow LED lights up during Serial communication TX output (transmitting).

Keys

UP key	Increases the numeric value, or progresses through the selection items.
DOWN key	Decreases the numeric value, or progresses back through the selection items.
MODE key	Selects a setting group.
SET/RESET key	Switches the setting modes, and registers the set value (or selected item).

Light Sensor	Automatically measures and controls brightness of the Turbidity/SS Display (CH1), Setting Display (CH2) and Action indicators.

⚠ Notice

When setting the specifications and functions of this instrument, connect mains power cable to terminals 13 and 14 first, then set them referring from "6. Outline of Key Operation and Setting Groups" to "8. Setup (pages 15 to 31)" before "3. Mounting to the Control Panel (p.9)" and "5. Wiring (p.12)".

3. Mounting to the Control Panel

3.1 Site Selection

> ⚠ **Caution**
>
> Use within the following temperature and humidity ranges.
> Temperature: 0 to 50℃ (32 to 122℉) (No icing), Humidity: 35 to 85 %RH (Non-condensing)
> If the WIL-101-TU is installed within a control panel, the ambient temperature of the unit – not the ambient temperature of the control panel – must be kept under 50℃. Otherwise the life of electronic parts (especially electrolytic capacitors) of the unit will be shortened.

This instrument is intended to be used under the following environmental conditions (IEC61010-1): Overvoltage category Ⅱ, Pollution degree 2

Ensure the mounting location corresponds to the following conditions:

- A minimum of dust, and an absence of corrosive gases
- No flammable, explosive gases
- No mechanical vibrations or shocks
- No exposure to direct sunlight, an ambient temperature of 0 to 50℃ (32 to 122℉) that does not change rapidly
- An ambient non-condensing humidity of 35 to 85 %RH
- No large capacity electromagnetic switches or cables through which large current is flowing
- No water, oil, chemicals or the vapors of these substances can come into direct contact with the unit.

3.2 External Dimensions (Scale: mm)

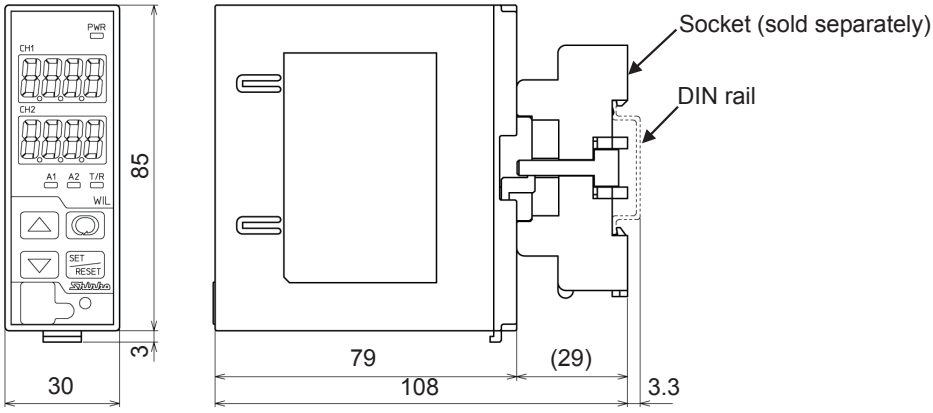

(Fig. 3.2-1)

3.3 Mounting

(1) Hook the upper part of the socket on the DIN rail, and mount it (A clicking sound is heard).

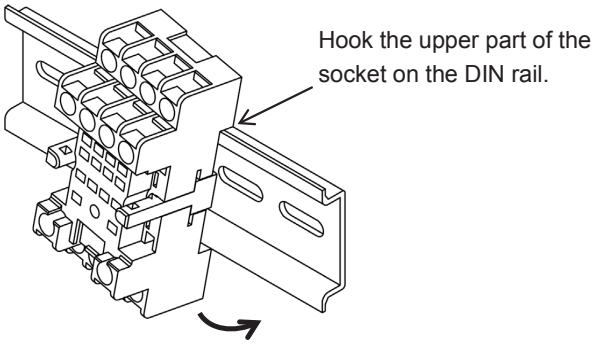

(Fig. 3.3-1)

⚠ Caution

Before inserting the WIL-101-TU into the socket, wire the unit while referring to Section “5. Wiring” (p.12).

(2) Check that the Lock Release has been lowered.

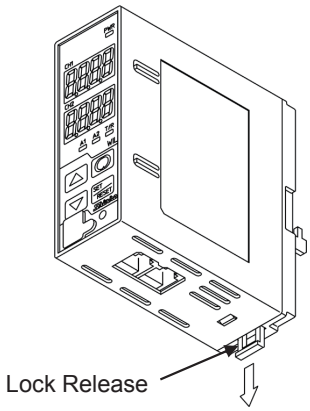

(Fig. 3.3-2)

(3) Insert the WIL-101-TU into the socket.

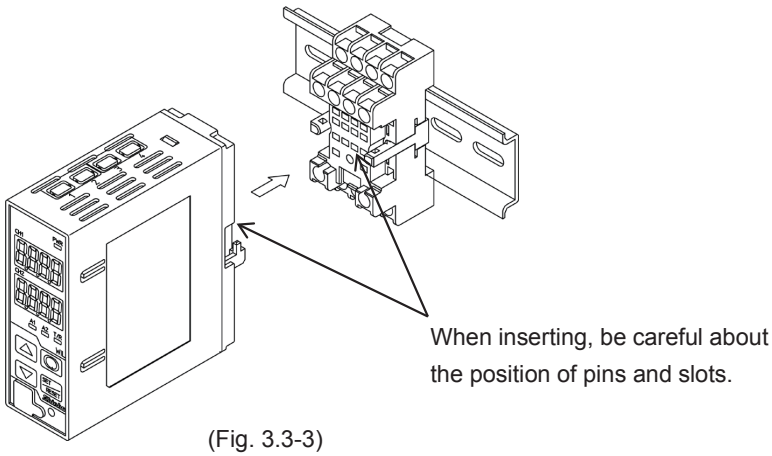

(Fig. 3.3-3)

(4) Fix the WIL-101-TU and the socket by pushing the Lock Release up.

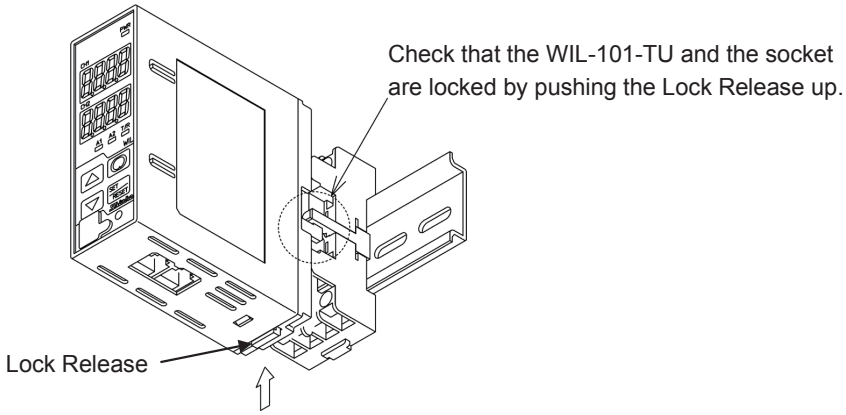

(Fig. 3.3-4)

4. Removal

(1) Turn the power supply to the unit OFF.

(2) Pull the Lock Release down, and release the WIL-101-TU from the socket.

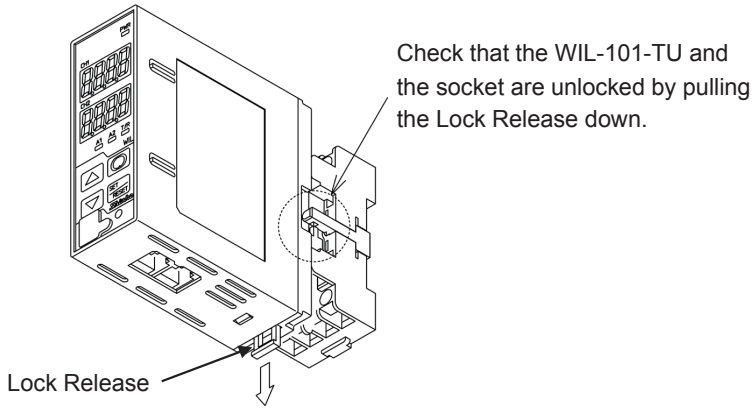

(Fig. 4-1)

(3) Separate the WIL-101-TU from the socket.

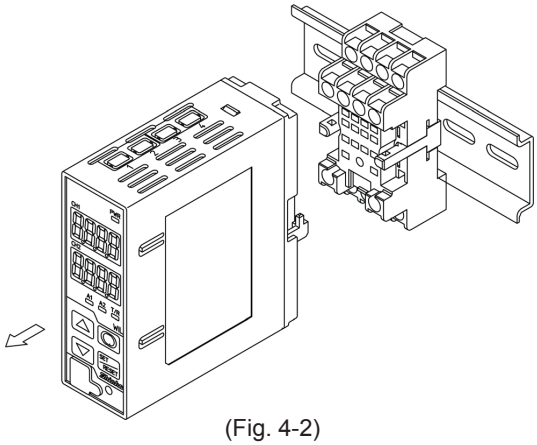

(Fig. 4-2)

(4) Remove the socket from the DIN rail by pulling the socket Lock Release (at the bottom of the socket) down.

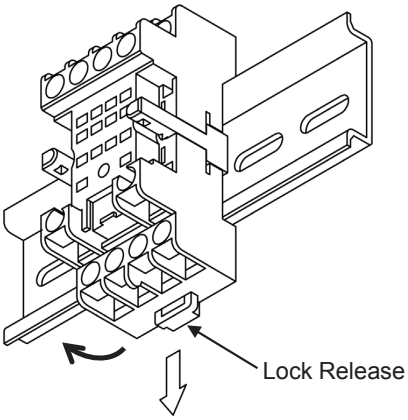

(Fig. 4-3)

5. Wiring

⚠ Warning

Turn the power supply to the instrument off before wiring or checking.
Working on or touching the terminal with the power switched on may result in severe injury or death due to electrical shock.

⚠ Caution

- Do not leave wire remnants in the instrument, as they could cause a fire or a malfunction.
- Use a solderless terminal with an insulation sleeve in which the M3 screw fits when wiring the unit.
- Tighten the terminal screw using the specified torque. If excessive force is applied to the screw when tightening, the terminal screw may be damaged.
- This instrument does not have a built-in power switch, circuit breaker and fuse.
  It is necessary to install a power switch, circuit breaker and fuse near the instrument.
  (Recommended fuse: Time-lag fuse, rated voltage 250 V AC, rated current 2 A)
- For a 24 V AC/DC power source, do not confuse polarity when using direct current (DC).
- Do not apply a commercial power source to the Turbidity/SS Sensor which is connected to the input terminal nor allow the power source to come into contact with the sensor.
- Use the Turbidity/SS Sensor made by OPTEX Co., Ltd.
- Keep the input wires and power lines separate.

5.1 Lead Wire Solderless Terminal

Use a solderless terminal with an insulation sleeve in which an M3 screw fits as follows.
For the sockets with finger-safe & screw fall prevention functions, the ring terminals are unusable.
The tightening torque should be 0.63 N•m.

Solderless Terminal	Manufacturer	Model
Y-type	Nichifu Terminal Industries CO., LTD.	TMEV1.25Y-3S
Ring-type	Nichifu Terminal Industries CO., LTD.	TMEV1.25-3
	Japan Solderless Terminal MFG CO., LTD.	V1.25-3

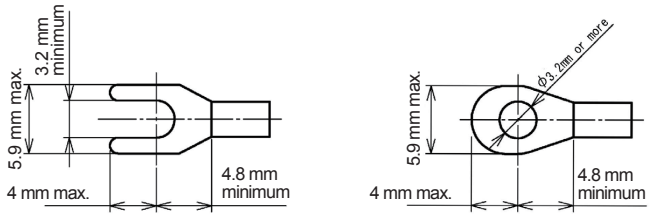

(Fig. 5.1-1)

5.2 Terminal Arrangement

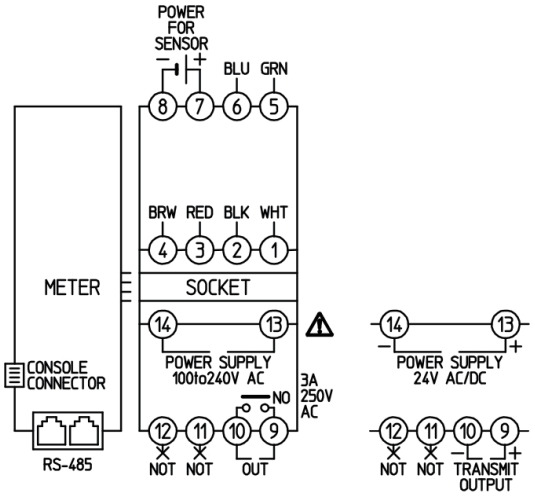

Modular Jack Pin (WIL-101-TU side arrangement)

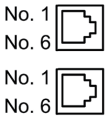

RS-485

No. 1	COM
No. 2	NC
No. 3	YB(+)
No. 4	YA(–)
No. 5	NC
No. 6	COM

(Fig. 5.2-1)

① WHT (White): Analog signal (+) input terminal of Turbidity/SS Sensor
② BLK (Black): Analog signal (–) input terminal of Turbidity/SS Sensor
③ RED (Red): Calibration signal output terminal of Turbidity/SS Sensor
④ BRW (Brown): Power (+) terminal of Turbidity/SS Sensor
⑤ GRN (Green): Self-check input terminal of Turbidity/SS Sensor
⑥ BLU (Blue): Power (–) terminal of Turbidity/SS sensor
⑦ POWER FOR SENSOR +: External power (+) terminal
⑧ POWER FOR SENSOR –: External power (–) terminal

When the EVT option is ordered:
⑨ - ⑩ OUT: A1 output (Contact output 1) terminals

When the TA option is ordered:
⑨ - ⑩ TRANSMIT OUTPUT: Transmission output terminals

⑪ NOT: Connection impossible
⑫ NOT: Connection impossible
⑬ - ⑭ POWER SUPPLY: Power terminals
RS-485: Serial Communication modular jack

Wiring example of WIL-101-TU, TA

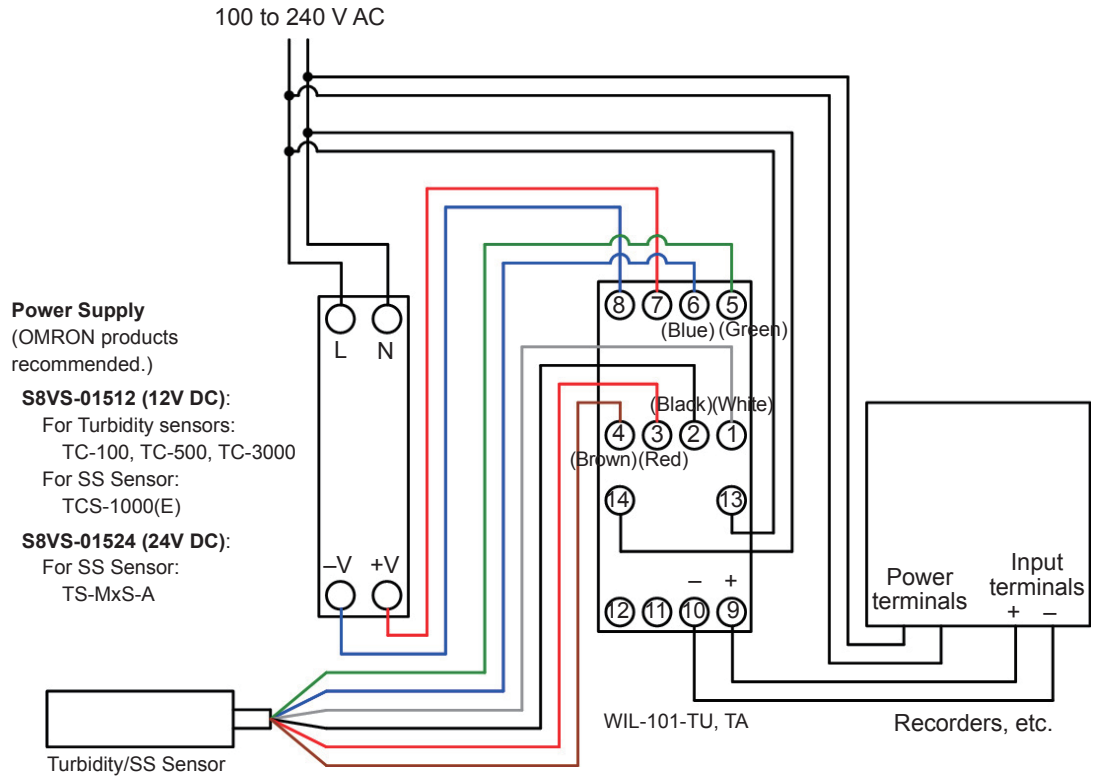

(Fig. 5.2-2)

5.3 Wire the Communication Line

Connect to the modular jack at the bottom of the instrument, using CDD (sold separately) or CPP (sold separately).

- **Wiring Example Using the USB Communication Cable CMC-001-3 (sold separately)**

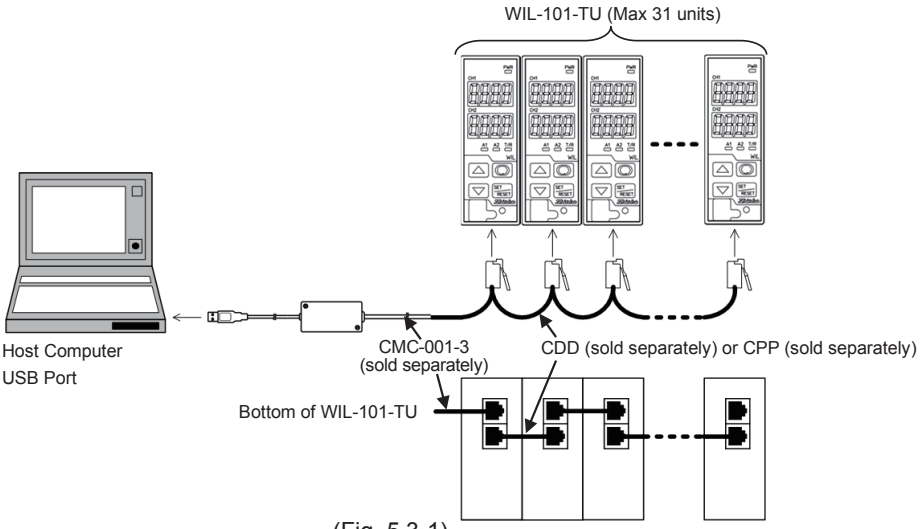

(Fig. 5.3-1)

- **Wiring Example Using the Communication Converter IF-400 (sold separately)**

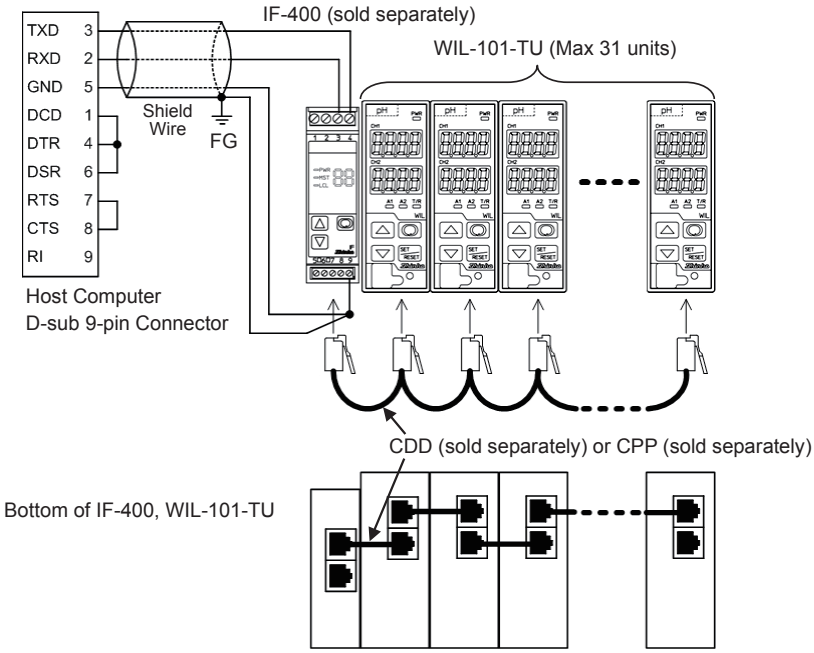

(Fig. 5.3-2)

Shield Wire

Be sure to ground only one end of the shield wire so that current cannot flow to the shield wire. If both ends of the shield wire are grounded, the circuit will be closed, resulting in a ground loop. This may cause noise. **Be sure to ground the FG.**

Recommended cable: OTSC-VB 2PX0.5SQ (made by Onamba Co., Ltd.) or equivalent
(Use a twisted pair cable.)

Terminator (Terminal Resistor)

The terminator is mounted at the end of the wire when connecting multiple peripheral devices to a personal computer. The terminator prevents signal reflection and disturbance.

Do not connect a terminator to the communication line because each WIL-101-TU has built-in pull-up and pull-down resistors.

Communication converter IF-400 (sold separately) has a built-in terminal resistor.

6. Outline of Key Operation and Setting Groups

6.1 Outline of Key Operation

Setting items are divided into groups, and group selection has to be made with keypads.
Press the key in Turbidity/SS Display Mode. The unit enters Group Selection Mode.
Select a group with the key, and press the SET/RESET key. The unit enters each setting item.
To set each setting item, use the △ or ▽ key, and register the set value with the SET/RESET key.

6.2 Setting Groups

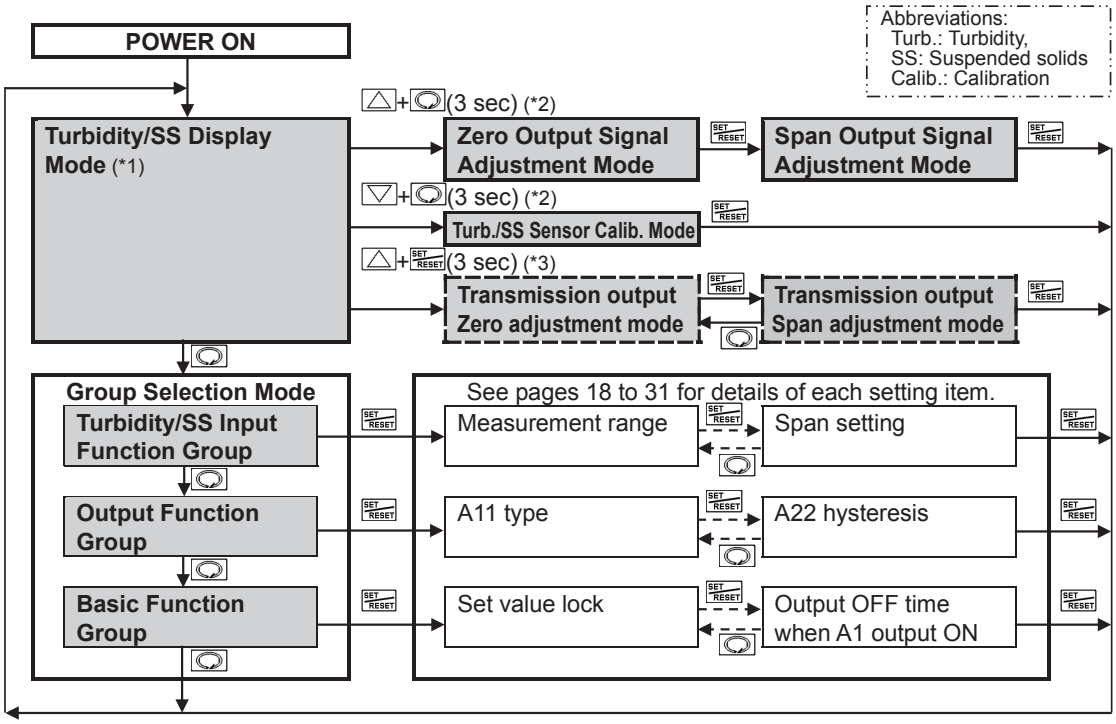

(*1) In Turbidity/SS Display Mode, measurement starts, indicating Turbidity/SS input value on the Turbidity/SS Display (CH1), and item selected in [Display selection (p.30)] on the Setting Display (CH2).

(*2) If Loc 1 (Lock 1), Loc2 (Lock 2) or Loc3 (Lock 3) is selected in [Set value lock (p.28)] of Basic Function Group, the unit cannot move to Zero Output Signal Adjustment Mode, Span Output Signal Adjustment Mode or Turbidity/SS Sensor Calibration Mode.

(*3) During Zero Output Signal Adjustment Mode, Span Output Signal Adjustment Mode or Turbidity/SS Sensor Calibration Mode, the unit cannot move to Transmission output Zero adjustment Mode.

: Available only when the TA option is ordered.

About Key Operation

- △+ (3 sec): Press and hold the △ key and key (in that order) together for 3 seconds. The unit will proceed to Zero Output Singal Adjustment Mode.
- ▽+ (3 sec): Press and hold the ▽ key and key (in that order) together for 3 seconds. The unit will proceed to Turbidity/SS Sensor Calibration Mode.
- △+SET/RESET (3 sec): Press and hold the △ key and SET/RESET key (in that order) together for 3 seconds. The unit will proceed to Transmission output Zero Adjustment Mode.
- , SET/RESET: Press the or SET/RESET key. The unit will proceed to the next setting item, illustrated by an arrow.
- SET/RESET or : Press the SET/RESET or key until the desired setting mode appears.
- To revert to Turbidity/SS Display Mode, press and hold for approx. 3 seconds while in any mode.

7. Key Operation Flowchart

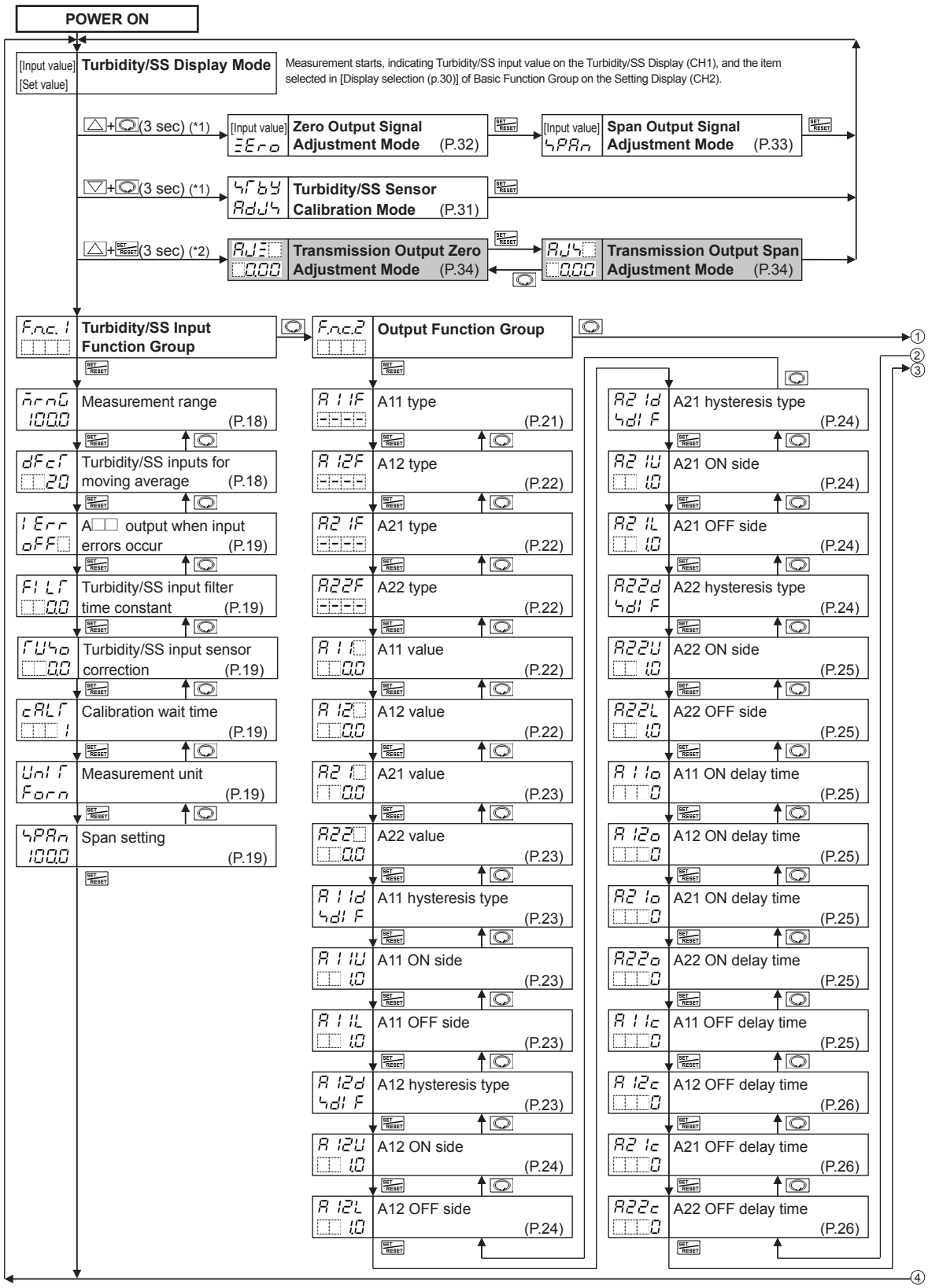

● **About Setting Items**

rnG 100.0	Measurement range (P.18)
rtLH 100.0	Transmission output high limit (P.29)

- Upper left: Turbidity/SS Display (CH1): Indicates the setting item characters.
- Lower left: Setting Display (CH2): Indicates the factory default.
- Right side: Indicates the setting item and reference page.

Setting items in shaded section will be displayed only when the corresponding option is ordered.

(*1) If Loc1 (Lock 1), Loc2 (Lock 2) or Loc3 (Lock 3) is selected in [Set value lock (p.28)] in the Basic Function Group, the unit cannot move to Zero Output Signal Adjustment Mode, Span Output Signal Adjustment Mode or Turbidity/SS Sensor Calibration Mode.

(*2) The unit cannot move to Transmission output mode while in Zero Output Signal Adjustment Mode, Span Output Signal Adjustment Mode or Turbidity/SS Sensor Calibration Mode.

● **About Key Operation**

- △+◯(3 sec): Press and hold the △, ◯ keys (in that order) together for 3 seconds, the unit will move to the next setting item.
- ▽+◯(3 sec): Press and hold the ▽, ◯ keys (in that order) together for 3 seconds, the unit will move to the next setting item.
- △+SET/RESET(3 sec): Press and hold the △, SET/RESET keys (in that order) together for 3 seconds, the unit will move to the next setting item.
- ◯ or SET/RESET: Press the ◯ or SET/RESET key.The unit will proceed to the next setting item, illustrated by an arrow.
- If the ◯ key is held down for approx. 3 seconds at any setting item, the unit will revert to Turbidity/SS Display Mode.

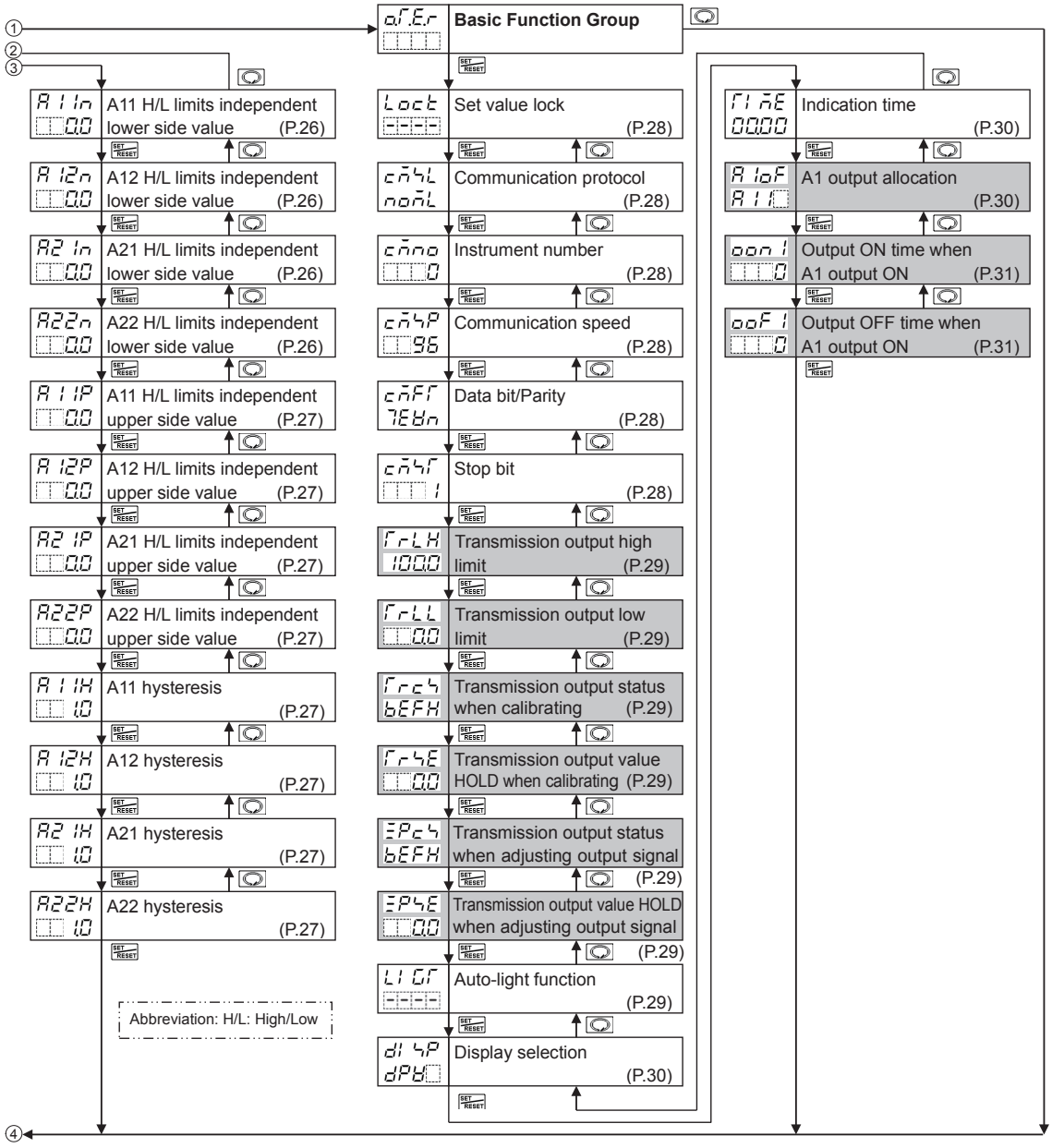

8. Setup

Setup should be done before using this instrument according to the user's conditions:
Setting the Turbidity/SS input functions (Measurement range, Turbidity/SS inputs for moving average), Output functions (A11, A12, A21, A22 types), Basic functions (Set value lock, Communication settings) etc.

Setup can be conducted in the groups below:
Turbidity/SS Input Function Group, Output Function Group, Basic Function Group
If the user's specification is the same as the factory default value of the WIL-101-TU, or if setup has already been completed, it is not necessary to set up the instrument. Proceed to "9. Calibration (p.32)".

8.1 Turn the Power Supply to the WIL-101-TU ON

For approx. 4 seconds after the power is switched ON, an input type is indicated on the Turbidity/SS Display (CH1) (Table 8.1-1). During this time, all outputs are in OFF status, and LED indicators – except the Setting Display (CH2) and PWR Indicator – turn off.
Measurement starts, indicating Turbidity/SS input value on the Turbidity/SS Display (CH1), and the item selected in [Display selection (p.30)] on the Setting Display (CH2). This status is called Turbidity/SS Display Mode.

(Table 8.1-1)

Measurement Range	Turbidity/SS Display (CH1)
0.0 to 100.0 (Formazin)	TU□1
0 to 500 (Formazin)	TU□5
0 to 3000 (Formazin)	TU30
0 to 1000 mg/L (Kaolin)	TU51
0 to 50000 mg/L (Kaolin)	TU55

8.2 Turbidity/SS Input Function Group

To enter the Turbidity/SS Input Function Group, follow the procedure below.
① F.n.1 Press the key in Turbidity/SS Display Mode.
② rnG Press the SET/RESET key.
The unit will enter the Turbidity/SS Input Function Group, and 'Measurement range' will appear.

Character	Setting Item, Function, Setting Range	Factory Default
rnG 100.0	**Measurement range** • Selects the measurement range corresponding to the Turbidity or SS Sensor model. **[Note] If the measurement range is changed, A11, A12, A21, A22 types in Output Function Group will revert to 'No action'. Therefore, set them again.** •	0.0 to 100.0 (Formazin)

Selection	Measurement Range	Model
100.0	0.0 to 100.0 (Formazin)	Turbidity Sensor TC-100
□500	0 to 500 (Formazin)	Turbidity Sensor TC-500
3000	0 to 3000 (Formazin)	Turbidity Sensor TC-3000
1000	0 to 1000 mg/L (Kaolin)	SS Sensor TCS-1000(E)
5000	0 to 50000 mg/L (Kaolin) (*)	SS Sensor TS-MxS-A

(*) The measurement range of the SS Sensor TS-MxS-A is 0 to 50000 mg/L (Kaolin).
As the Turbidity/SS Display (CH1) has 4 digits, the value 10000 mg/L or higher cannot be indicated.
Therefore, the ones digit of current Turbidity/SS input value is rounded off, divided by 10, and then indicated. (e.g.) 25004 mg/L (Kaolin): Indicated as 2500.
25005 mg/L (Kaolin): Indicated as 2501.

dFcT □□20	**Turbidity/SS inputs for moving average** • Sets the number of turbidity/SS inputs used to obtain a moving average. • Setting range: 1 to 120	20

Character	Setting Item, Function, Setting Range	Factory Default
I Err oFF□	**A□□ output when input errors occur** • A□□ output Enabled/Disabled can be selected when input errors occur, such as Turbidity/SS Sensor is disconnected or short-circuited. If "Enabled" is selected, A□□ output and A□□ output status will be maintained when input errors occur. If "Disabled" is selected, A□□ output and A□□ output status will be turned OFF when input errors occur. • Available when TU_L (Turbidity/SS input low limit action) or TU_H (Turbidity/SS input high limit action) is selected in [A□□ type]. • on□□: Enabled oFF□: Disabled	Disabled
FILT □□0.0	**Turbidity/SS input filter time constant** • Sets the filter time constant for Turbidity/SS input. If the filter time constant is set too large, it affects A□□ output due to the delay of response. • Setting range: 0.0 to 10.0 seconds	0.0 seconds
TUSo □□0.0	**Turbidity/SS input sensor correction** • Sets Turbidity/SS input sensor correction value. This corrects the input value from the Turbidity/SS Sensor. When a sensor cannot be set at the exact location where measurement is desired, Turbidity/SS input value measured by the sensor may deviate from the value in the measured location. In this case, desired Turbidity/SS input value can be obtained by adding a sensor correction value. However, it is only effective within the measurement range regardless of the sensor correction value. Turbidity/SS input value after sensor correction = Current Turbidity/SS input value + (Sensor correction value) • Setting range: ±10% of measurement span (*1)	0.0
cALT □□□ 1	**Calibration wait time** • Sets the waiting time until calibration signal output turns from OFF to ON after the unit has entered Turbidity/SS Sensor Calibration mode. • Setting range: 0 to 10 minutes	1 minute
UnIT Form	**Measurement unit** (*2) • Selects the measurement range unit. **[Note] If the measurement unit is changed, A11, A12, A21, A22 types in Output Function Group will revert to 'No action'. Therefore, set them again**. Not available if 1000 [0 to 1000 mg/L (Kaolin)] or 5000 [0 to 50000 mg/L (Kaolin)] is selected in [Measurement range]. • Form : Formazin tAon : Kaolin (mg/L)	Formazin
SPAn 100.0	**Span setting** (*2) • Sets the Kaolin span for changing from Formazin measurement units to Kaolin measurement units. Available when tAon (Kaolin) is selected in [Measurement unit]. • Setting range: See (Table 8.2-1) (p.20).	100.0 (Formazin)

(*1) The measurement unit and decimal point place follow the measurement range. If tAon [Kaolin (mg/L)] is selected in [Measurement unit], the measurement span will be the value set in [Span setting].

(*2) In [Measurement unit] and [Span setting], Formazin Turbidity/SS input value can be changed to the equivalent Kaolin measurement units.
Refer to the example on p.20.

(e.g.) When changing Formazin Turbidity/SS input value to Kaolin value by using the Turbidity Sensor.

Step	Description
①	Take several examples of Turbidity/SS input value and Kaolin value in order to examine the correlation between them. This must be done in the desired measurement location.
②	Confirm that both Formazin Turbidity/SS input value and Kaolin value are linearly related, and calculate Span setting value using the value from each measurement unit closest to the Span setting value. The following shows the calculating formula. Span setting value = Current Span setting value x Kaolin value / Formazin Turbidity/SS input value (e.g.) Current Span setting value (Formazin): 100.0 Turbidity/SS input value (Formazin): 80.0 Kaolin value: 60.0 mg/L Span setting value = 100.0 x 60.0 / 80.0 = 75.0
③	Select tRon [Kaolin (mg/L)] in [Measurement unit].
④	For the Span setting, set the value calculated at step ② (e.g. 75.0).
⑤	Attach the user's unit of Turbidity/SS Display (CH1) from the included unit labels if necessary. (See p.8.)

(Table 8.2-1)

Measurement Range	Measurement unit	Setting Range	Factory Default
0.0 to 100.0 (Formazin)	Kaolin (mg/L)	0.0 to 900.0 (Formazin)	100.0 (Formazin)
0 to 500 (Formazin)		0 to 9000 (Formazin)	500 (Formazin)
0 to 3000 (Formazin)		0 to 9000 (Formazin)	3000 (Formazin)

8.3 Output Function Group

To enter the Output Function Group, follow the procedure below.

① F.n.2 Press the key twice in Turbidity/SS Display Mode.

② A 1 1F Press the SET/RESET key.

The unit will enter the Output Function Group, and 'A11 type' will appear.

Character	Setting Item, Function, Setting Range	Factory Default
A 1 1F -:-:-:-	**A11 type**	No action

• Selects an A11 type.

Note: If A11 type is changed, A11 value defaults to 0 (zero).

• -:-:-:-: No action

FU_L : Turbidity/SS input low limit action (Fig. 8.3-1)

FU_H : Turbidity/SS input high limit action (Fig. 8.3-1)

Error : Error output [When the error type is "Error" (Table 8.3-1) (p.22), the output is turned ON.]

FAIL : Fail output [When the error type is "Fail" (Table 8.3-1) (p.22), the output is turned ON.]

FUHL : Turbidity/SS input High/Low limits independent action (Fig. 8.3-2)

• **A11 Action (Activated based on the indication value.)**

Turbidity/SS input low limit action	Turbidity/SS input high limit action
If Medium Value is selected in [A11 hysteresis type]:	If Medium Value is selected in [A11 hysteresis type]:
If Reference Value is selected in [A11 hysteresis type]:	If Reference Value is selected in [A11 hysteresis type]:

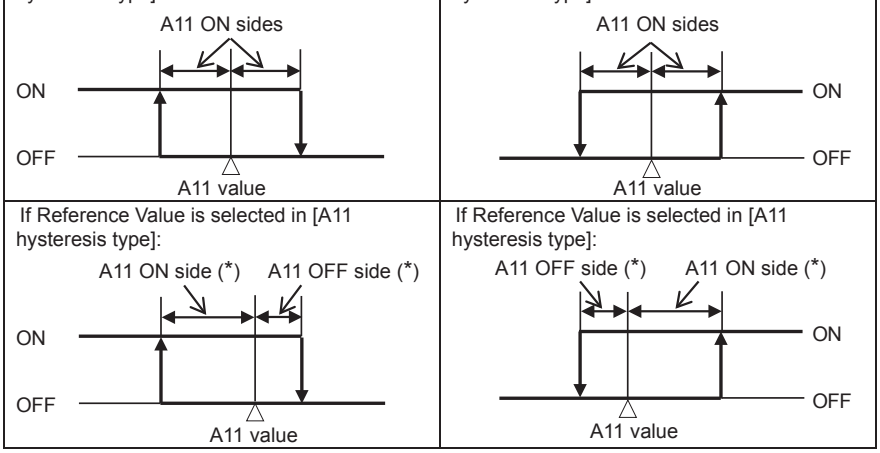

(Fig. 8.3-1)

*** Setting Example:**

If [A11 ON side (A 1 1U)] is set to 0.0, A11 output can be turned ON at the value set in [A11 value (A 1 1)].

If [A11 OFF side (A 1 1L)] is set to 0.0, A11 output can be turned OFF at the value set in [A11 value (A 1 1)].

Turbidity/SS input High/Low limits independent action

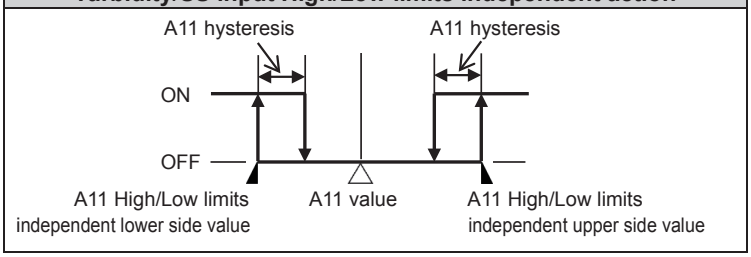

(Fig. 8.3-2)

Character	Setting Item, Function, Setting Range	Factory Default
	• **Error output, Fail output** **(Table 8.3-1)**	

Error Type	Error Contents	Occur-rence
Fail	When Self-check output from the Turbidity/SS Sensor is received.	When measuring
Fail	Analog signal (+ white, – black) cable of Turbidity/SS Sensor is disconnected or short-circuited.	
Error	Turbidity/SS input value has exceeded the value equivalent to 20.5 mA DC.	
Error	Turbidity/SS input value has become lower than the value equivalent to 3.5 mA DC.	
Fail	During calibration, the output signal from the Turbidity/SS Sensor does not become approx. 2 mA DC. (Before calibration signal output is turned from ON to OFF, if the output signal from the Turbidity/SS Sensor is within 1 to 3 mA DC, it is regarded as normal. If the output signal is outside this range, it is regarded as an error.)	When calibrating
Fail	After calibration is complete, the output signal from the Turbidity/SS Sensor does not return to 4 mA DC. (Approximately 5 seconds after calibration signal output is turned from ON to OFF, if the output signal from the Turbidity/SS Sensor is within 3.5 to 4.5 mA DC, it is regarded as normal. If the output signal is outside this range, it is regarded as an error.)	
Error	During Span output signal adjustment, the Turbidity/SS input value has exceeded the value equivalent to 20.5 mA DC.	When adjusting
Error	During Zero output signal adjustment, the Turbidity/SS input value has become lower than the value equivalent to 3.5 mA DC.	

A 12F ----	**A12 type** • Selects an A12 type. **Note: If A12 type is changed, A12 value defaults to 0 (zero).** • For the selection item and action, see A11 type (pp.21, 22).	No action
A2 1F ----	**A21 type** • Selects an A21 type. **Note: If A21 type is changed, A21 value defaults to 0 (zero).** • For the selection item and action, see A11 type (pp.21, 22).	No action
A22F ----	**A22 type** • Selects an A22 type. **Note: If A22 type is changed, A22 value defaults to 0 (zero).** • For the selection item and action, see A11 type (pp.21, 22).	No action
A 1 1□ □□0.0	**A11 value** • Selects an A11 value. See (Fig. 8.3-1). (p.21) • Available when TU_L (Turbidity/SS input low limit action), TU_H (Turbidity/SS input high limit action) or TUHL (Turbidity/SS input High/Low limits independent action) is selected in [A11 type]. • Setting range: Measurement range low limit to Measurement range high limit (*1)(*2)	0.0 (Formazin)
A 12□ □□0.0	**A12 value** • Selects an A12 value. See (Fig. 8.3-1). (p.21) • Available when TU_L (Turbidity/SS input low limit action), TU_H (Turbidity/SS input high limit action) or TUHL (Turbidity/SS input High/Low limits independent action) is selected in [A12 type]. • Setting range: Measurement range low limit to Measurement range high limit (*1)(*2)	0.0 (Formazin)

(*1) The measurement unit and decimal point place follow the measurement range.
(*2) If tRon [Kaolin (mg/L)] is selected in [Measurement unit], the Measurement range high limit value will become the value set in [Span setting].

Character	Setting Item, Function, Setting Range	Factory Default
A21 0.0	**A21 value** • Selects an A21 value. See (Fig. 8.3-1). (p.21) • Available when TU_L (Turbidity/SS input low limit action), TU_H (Turbidity/SS input high limit action) or TUHL (Turbidity/SS input High/Low limits independent action) is selected in [A21 type]. • Setting range: Measurement range low limit to Measurement range high limit (*1)(*2)	0.0 (Formazin)
A22 0.0	**A22 value** • Selects an A22 value. See (Fig. 8.3-1). (p.21) • Available when TU_L (Turbidity/SS input low limit action), TU_H (Turbidity/SS input high limit action) or TUHL (Turbidity/SS input High/Low limits independent action) is selected in [A22 type]. • Setting range: Measurement range low limit to Measurement range high limit (*1)(*2)	0.0 (Formazin)
A11d hdiF	**A11 hysteresis type** • Selects A11 output hysteresis type (Medium or Reference Value). (Fig. 8.3-1) (p.21) • Available when TU_L (Turbidity/SS input low limit action) or TU_H (Turbidity/SS input high limit action) is selected in [A11 type]. • cdiF: Medium Value Sets the same value for both ON and OFF sides in relation to A11 value. Only ON side needs to be set. hdiF: Reference Value Sets individual values for ON and OFF sides in relation to A11 value. Both ON and OFF sides need to be set individually.	Reference Value
A11U 1.0	**A11 ON side** • Sets the span of A11 ON side. See (Fig. 8.3-1). (p.21) If cdiF (Medium Value) is selected in [A11 hysteresis type], the span of ON/OFF side will be the same value. • Available when TU_L (Turbidity/SS input low limit action) or TU_H (Turbidity/SS input high limit action) is selected in [A11 type]. • Setting range: 10% of measurement span (*1)(*3)	1.0 (Formazin)
A11L 1.0	**A11 OFF side** • Sets the span of A11 OFF side. See (Fig. 8.3-1). (p.21) • Available if hdiF (Reference Value) is selected in [A11 hysteresis type]. Available when TU_L (Turbidity/SS input low limit action) or TU_H (Turbidity/SS input high limit action) is selected in [A11 type]. • Setting range: 10% of measurement span (*1)(*3)	1.0 (Formazin)
A12d hdiF	**A12 hysteresis type** • Selects A12 output hysteresis type (Medium or Reference Value). (Fig. 8.3-1) (p.21) • Available when TU_L (Turbidity/SS input low limit action) or TU_H (Turbidity/SS input high limit action) is selected in [A12 type]. • cdiF: Medium Value Sets the same value for both ON and OFF sides in relation to A12 value. Only ON side needs to be set. hdiF: Reference Value Sets individual values for ON and OFF sides in relation to A12 value. Both ON and OFF sides need to be set individually.	Reference Value

(*1) The measurement unit and decimal point place follow the measurement range.
(*2) If tRon [Kaolin (mg/L)] is selected in [Measurement unit], the Measurement range high limit value will become the value set in [Span setting].
(*3) If tRon [Kaolin (mg/L)] is selected in [Measurement unit], the Measurement span will become the value set in [Span setting].

Character	Setting Item, Function, Setting Range	Factory Default
A12U 10	**A12 ON side** • Sets the span of A12 ON side. See (Fig. 8.3-1). (p.21) If cdIF (Medium Value) is selected in [A12 hysteresis type], the span of ON/OFF side will be the same value. • Available when TU_L (Turbidity/SS input low limit action) or TU_H (Turbidity/SS input high limit action) is selected in [A12 type]. • Setting range: 10% of measurement span (*)	1.0 (Formazin)
A12L 10	**A12 OFF side** • Sets the span of A12 OFF side. See (Fig. 8.3-1). (p.21) • Available if hdIF (Reference Value) is selected in [A12 hysteresis type]. Available when TU_L (Turbidity/SS input low limit action) or TU_H (Turbidity/SS input high limit action) is selected in [A12 type]. • Setting range: 10% of measurement span (*)	1.0 (Formazin)
A21d hdIF	**A21 hysteresis type** • Selects A21 output hysteresis type (Medium or Reference Value). (Fig. 8.3-1) (p.21) • Available when TU_L (Turbidity/SS input low limit action) or TU_H (Turbidity/SS input high limit action) is selected in [A21 type]. • cdIF: Medium Value Sets the same value for both ON and OFF sides in relation to A21 value. Only ON side needs to be set. hdIF: Reference Value Sets individual values for ON and OFF sides in relation to A21 value. Both ON and OFF sides need to be set individually.	Reference Value
A21U 10	**A21 ON side** • Sets the span of A21 ON side. See (Fig. 8.3-1). (p.21). If cdIF (Medium Value) is selected in [A21 hysteresis type], the span of ON/OFF side will be the same value. • Available when TU_L (Turbidity/SS input low limit action) or TU_H (Turbidity/SS input high limit action) is selected in [A21 type]. • Setting range: 10% of measurement span (*1)(*3)	1.0 (Formazin)
A21L 10	**A21 OFF side** • Sets the span of A21 OFF side. See (Fig. 8.3-1, p.20). • Available if hdIF (Reference Value) is selected in [A21 hysteresis type]. Available when TU_L (Turbidity/SS input low limit action) or TU_H (Turbidity/SS input high limit action) is selected in [A21 type]. • Setting range: 10% of measurement span (*1)(*3)	1.0 (Formazin)
A22d hdIF	**A22 hysteresis type** • Selects A22 output hysteresis type (Medium or Reference Value). (Fig. 8.3-1) (p.21) • Available when TU_L (Turbidity/SS input low limit action) or TU_H (Turbidity/SS input high limit action) is selected in [A22 type]. • cdIF: Medium Value Sets the same value for both ON and OFF sides in relation to A22 value. Only ON side needs to be set. hdIF: Reference Value Sets individual values for ON and OFF sides in relation to A22 value. Both ON and OFF sides need to be set individually.	Reference Value

(*) The measurement unit and decimal point place follow the measurement range.
If tRon [Kaolin (mg/L)] is selected in [Measurement unit], the Measurement span will become the value set in [Span setting].

Character	Setting Item, Function, Setting Range	Factory Default
A22U 10	**A22 ON side** • Sets the span of A22 ON side. See (Fig. 8.3-1). (p.21) If cdiF (Medium Value) is selected in [A22 hysteresis type], the span of ON/OFF side will be the same value. • Available when TU_L (Turbidity/SS input low limit action) or TU_H (Turbidity/SS input high limit action) is selected in [A22 type]. • Setting range: 10% of measurement span (*)	1.0 (Formazin)
A22L 10	**A22 OFF side** • Sets the span of A22 OFF side. See (Fig. 8.3-1). (p.21) • Available if hdiF (Reference Value) is selected in [A22 hysteresis type]. Available when TU_L (Turbidity/SS input low limit action) or TU_H (Turbidity/SS input high limit action) is selected in [A22 type]. • Setting range: 10% of measurement span (*)	1.0 (Formazin)
A11o 0	**A11 ON delay time** • Sets A11 ON delay time. The A11 output does not turn ON (under the conditions of turning ON) until the time set in [A11 ON delay time] elapses. • Available when TU_L (Turbidity/SS input low limit action), TU_H (Turbidity/SS input high limit action) or TUHL (Turbidity/SS input High/Low limits independent action) is selected in [A11 type]. • Setting range: 0 to 9999 seconds	0 seconds
A12o 0	**A12 ON delay time** • Sets A12 ON delay time. The A12 output does not turn ON (under the conditions of turning ON) until the time set in [A12 ON delay time] elapses. • Available when TU_L (Turbidity/SS input low limit action), TU_H (Turbidity/SS input high limit action) or TUHL (Turbidity/SS input High/Low limits independent action) is selected in [A12 type]. • Setting range: 0 to 9999 seconds	0 seconds
A21o 0	**A21 ON delay time** • Sets A21 ON delay time. The A21 output does not turn ON (under the conditions of turning ON) until the time set in [A21 ON delay time] elapses. • Available when TU_L (Turbidity/SS input low limit action), TU_H (Turbidity/SS input high limit action) or TUHL (Turbidity/SS input High/Low limits independent action) is selected in [A21 type]. • Setting range: 0 to 9999 seconds	0 seconds
A22o 0	**A22 ON delay time** • Sets A22 ON delay time. The A22 output does not turn ON (under the conditions of turning ON) until the time set in [A22 ON delay time] elapses. • Available when TU_L (Turbidity/SS input low limit action), TU_H (Turbidity/SS input high limit action) or TUHL (Turbidity/SS input High/Low limits independent action) is selected in [A22 type]. • Setting range: 0 to 9999 seconds	0 seconds
A11c 0	**A11 OFF delay time** • Sets A11 OFF delay time. The A11 output does not turn OFF (under the conditions of turning OFF) until the time set in [A11 OFF delay time] elapses. • Available when TU_L (Turbidity/SS input low limit action), TU_H (Turbidity/SS input high limit action) or TUHL (Turbidity/SS input High/Low limits independent action) is selected in [A11 type]. • Setting range: 0 to 9999 seconds	0 seconds

(*) The measurement unit and decimal point place follow the measurement range.
If tKon [Kaolin (mg/L)] is selected in [Measurement unit], the Measurement span will become the value set in [Span setting].

Character	Setting Item, Function, Setting Range	Factory Default
A12c 0	**A12 OFF delay time** • Sets A12 OFF delay time. The A12 output does not turn OFF (under the conditions of turning OFF) until the time set in [A12 OFF delay time] elapses. • Available when TU_L (Turbidity/SS input low limit action), TU_H (Turbidity/SS input high limit action) or TUHL (Turbidity/SS input High/Low limits independent action) is selected in [A12 type]. • Setting range: 0 to 9999 seconds	0 seconds
A21c 0	**A21 OFF delay time** • Sets A21 OFF delay time. The A21 output does not turn OFF (under the conditions of turning OFF) until the time set in [A21 OFF delay time] elapses. • Available when TU_L (Turbidity/SS input low limit action), TU_H (Turbidity/SS input high limit action) or TUHL (Turbidity/SS input High/Low limits independent action) is selected in [A21 type]. • Setting range: 0 to 9999 seconds	0 seconds
A22c 0	**A22 OFF delay time** • Sets A22 OFF delay time. The A22 output does not turn OFF (under the conditions of turning OFF) until the time set in [A22 OFF delay time] elapses. • Available when TU_L (Turbidity/SS input low limit action), TU_H (Turbidity/SS input high limit action) or TUHL (Turbidity/SS input High/Low limits independent action) is selected in [A22 type]. • Setting range: 0 to 9999 seconds	0 seconds
A11n 0.0	**A11 High/Low limits independent lower side value** • Sets the lower side value of A11 High/Low limits independent action. (Fig. 8.3-2)(p.21) Disabled when set to 0 or 0.0. • Available when TUHL (Turbidity/SS input High/Low limits independent action) is selected in [A11 type]. • Setting range: Measurement range low limit to Measurement range high limit (*1)(*2)	0.0 (Formazin)
A12n 0.0	**A12 High/Low limits independent lower side value** • Sets the lower side value of A12 High/Low limits independent action. (Fig. 8.3-2)(p.21) Disabled when set to 0 or 0.0. • Available when TUHL (Turbidity/SS input High/Low limits independent action) is selected in [A12 type]. • Setting range: Measurement range low limit to Measurement range high limit (*1)(*2)	0.0 (Formazin)
A21n 0.0	**A21 High/Low limits independent lower side value** • Sets the lower side value of A21 High/Low limits independent action. (Fig. 8.3-2)(p.21) Disabled when set to 0 or 0.0. • Available when TUHL (Turbidity/SS input High/Low limits independent action) is selected in [A21 type]. • Setting range: Measurement range low limit to Measurement range high limit (*1)(*2)	0.0 (Formazin)
A22n 0.0	**A22 High/Low limits independent lower side value** • Sets the lower side value of A22 High/Low limits independent action. (Fig. 8.3-2)(p.21) Disabled when set to 0 or 0.0. • Available when TUHL (Turbidity/SS input High/Low limits independent action) is selected in [A22 type]. • Setting range: Measurement range low limit to Measurement range high limit (*1)(*2)	0.0 (Formazin)

(*1) The measurement unit and decimal point place follow the measurement range.
(*2) If tRon [Kaolin (mg/L)] is selected in [Measurement unit], the Measurement range high limit value will become the value set in [Span setting].

Character	Setting Item, Function, Setting Range	Factory Default
A11P 0.0	**A11 High/Low limits independent upper side value** • Sets the upper side value of A11 High/Low limits independent action. (Fig. 8.3-2)(p.21) Disabled when set to 0 or 0.0. • Available when TUHL (Turbidity/SS input High/Low limits independent action) is selected in [A11 type]. • Setting range: Measurement range low limit to Measurement range high limit (*1)(*2)	0.0 (Formazin)
A12P 0.0	**A12 High/Low limits independent upper side value** • Sets the upper side value of A12 High/Low limits independent action. (Fig. 8.3-2)(p.21) Disabled when set to 0 or 0.0. • Available when TUHL (Turbidity/SS input High/Low limits independent action) is selected in [A12 type]. • Setting range: Measurement range low limit to Measurement range high limit (*1)(*2)	0.0 (Formazin)
A21P 0.0	**A21 High/Low limits independent upper side value** • Sets the upper side value of A21 High/Low limits independent action. (Fig. 8.3-2)(p.21) Disabled when set to 0 or 0.0. • Available when TUHL (Turbidity/SS input High/Low limits independent action) is selected in [A21 type]. • Setting range: Measurement range low limit to Measurement range high limit (*1)(*2)	0.0 (Formazin)
A22P 0.0	**A22 High/Low limits independent upper side value** • Sets the upper side value of A22 High/Low limits independent action. (Fig. 8.3-2)(p.21) Disabled when set to 0 or 0.0. • Available when TUHL (Turbidity/SS input High/Low limits independent action) is selected in [A22 type]. • Setting range: Measurement range low limit to Measurement range high limit (*1)(*2)	0.0 (Formazin)
A11H 1.0	**A11 hysteresis** • Sets hysteresis of A11 High/Low limits independent action. (Fig. 8.3-2)(p.21) • Available when TUHL (Turbidity/SS input High/Low limits independent action) is selected in [A11 type]. • Setting range: 0.1 to 10% of measurement span (*1)(*3)	1.0 (Formazin)
A12H 1.0	**A12 hysteresis** • Sets hysteresis of A12 High/Low limits independent action. (Fig. 8.3-2)(p.21) • Available when TUHL (Turbidity/SS input High/Low limits independent action) is selected in [A12 type]. • Setting range: 0.1 to 10% of measurement span (*1)(*3)	1.0 (Formazin)
A21H 1.0	**A21 hysteresis** • Sets hysteresis of A21 High/Low limits independent action. (Fig. 8.3-2)(p.21) • Available when TUHL (Turbidity/SS input High/Low limits independent action) is selected in [A21 type]. • Setting range: 0.1 to 10% of measurement span (*1)(*3)	1.0 (Formazin)
A22H 1.0	**A22 hysteresis** • Sets hysteresis of A22 High/Low limits independent action. (Fig. 8.3-2)(p.21) • Available when TUHL (Turbidity/SS input High/Low limits independent action) is selected in [A22 type]. • Setting range: 0.1 to 10% of measurement span (*1)(*3)	1.0 (Formazin)

(*1) The measurement unit and decimal point place follow the measurement range.
(*2) If tRon [Kaolin (mg/L)] is selected in [Measurement unit], the Measurement range high limit value will become the value set in [Span setting].
(*3) If tRon [Kaolin (mg/L)] is selected in [Measurement unit], the Measurement span will become the value set in [Span setting].

8.4 Basic Function Group

To enter the Basic Function Group, follow the procedure below.

① a.r.E.r Press the key 3 times in Turbidity/SS Display Mode.

② Lock Press the SET RESET key.

The unit will enter the Basic Function Group, and the 'Set value lock' will appear.

Character	Setting Item, Function, Setting Range	Factory Default
Lock ----	**Set value lock** • Locks the set values to prevent setting errors. • ---- (Unlock): All set values can be changed. Loc 1 (Lock 1): None of the set values can be changed. Loc2 (Lock 2): Only A11, A12, A21, A22 values can be changed. Loc3 (Lock 3): All set values – except Measurement range, Measurement unit, Span setting, Zero and Span output signal adjustments, Turbidity/SS Sensor calibration, Transmission output Zero and Span adjustments – can be temporarily changed. However, they revert to their previous value after the power is turned off because they are not saved in the non-volatile IC memory. Do not change setting items (A11, A12, A21, A22 types). If they are changed, they will affect other setting items. Be sure to select Lock 3 when changing the set value frequently via software communication. (If a value set by the software communication is the same as the value before the setting, the value will not be written in the non-volatile IC memory.)	Unlock
chnL nonL	**Communication protocol** • Selects communication protocol. • nonL : Shinko protocol modA : MODBUS ASCII mode modr : MODBUS RTU mode	Shinko protocol
chno 0	**Instrument number** • Sets the instrument number. (The instrument numbers should be set one by one when multiple instruments are connected in Serial communication, otherwise communication is impossible.) • Setting range: 0 to 95	0
chsP 96	**Communication speed** • Selects a communication speed equal to that of the host computer. • 96 : 9600 bps 192 : 19200 bps 384 : 38400 bps	9600 bps
chFr 7Eon	**Data bit/Parity** • Selects data bit and parity. • 8non : 8 bits/No parity 7non : 7 bits/No parity 8Eon : 8 bits/Even 7Eon : 7 bits/Even 8odd : 8 bits/Odd 7odd : 7 bits/Odd	7 bits/Even
chsr 1	**Stop bit** • Selects the stop bit. • 1 : 1 bit 2 : 2 bits	1 bit

Character	Setting Item, Function, Setting Range	Factory Default
TrLH 100.0	**Transmission output high limit** • Sets the Transmission output high limit value. (This value correponds to 20 mA DC output.) If Transmission output high limit and low limit are set to the same value, Transmission output will be fixed at 4 mA DC. • Available only when Transmission output (TA option) is ordered. • Setting range: Transmission output low limit to Measurement range high limit (*1)(*2)	100.0 (Formazin)
TrLL 0.0	**Transmission output low limit** • Sets the Transmission output low limit value. (This value correponds to 4 mA DC output.) If Transmission output high limit and low limit are set to the same value, Transmission output will be fixed at 4 mA DC. • Available only when Transmission output (TA option) is ordered. • Setting range: Measurement range low limit to Transmission output high limit (*1)	0.0 (Formazin)
Trch bEFH	**Transmission output status when calibrating** • Selects the Transmission output status when calibrating. • Available when TA option is ordered. • bEFH: Last value HOLD (Retains the last value before calibration, and outputs it.) SETH: Set value HOLD (Outputs the value set in [Transmission output value HOLD when calibrating].) PVH: Measured value (Outputs the measured value when calibrating.)	Last value HOLD
TrSE 0.0	**Transmission output value HOLD when calibrating** • Sets Transmission output value HOLD. • Available when SETH (Set value HOLD) is selected in [Transmission output status when calibrating]. • Setting range: Measurement range low limit to Measurement range high limit (*1)(*2)	0.0 (Formazin)
EPch bEFH	**Transmission output status when adjusting output signal** • Selects the Transmission output status when adjusting Zero output signal or Span output signal. • Available when Transmission output (TA option) is ordered. • bEFH: Last value HOLD (Retains the last value before adjusting output signal, and outputs it.) SETH: Set value HOLD (Outputs the value set in [Transmission output value HOLD when adjusting output signal].) PVH: Measured value (Outputs the measured value when adjusting output signal.)	Last value HOLD
EPSE 0.0	**Transmission output value HOLD when adjusting output signal** • Sets Transmission output value HOLD. • Available when SETH (Set value HOLD) is selected in [Transmission output status when adjusting output signal]. • Setting range: Measurement range low limit to Measurement range high limit (*1)(*2)	0.0 (Formazin)
LIGF ----	**Auto-light function** • Selects Auto-light Enabled/Disabled. • ---- : Disabled USE : Enabled	Disabled

(*1) The measurement unit and decimal point place follow the measurement range.
(*2) If kAon [Kaolin (mg/L)] is selected in [Measurement unit], the Measurement range high limit value will become the value set in [Span setting].

Character	Setting Item, Function, Setting Range	Factory Default
dISP dPU□	**Display selection** • Selects items to be indicated while in Turbidity/SS Display Mode. • Selection item	Turbidity/SS Display (CH1): Turbidity/SS input value Setting Display (CH2): No indication

Selection Item	Turbidity/SS Display (CH1)	Setting Display (CH2)
dPU□	Turbidity/SS input value	No indication
dA11	Turbidity/SS input value	A11 value
dA12	Turbidity/SS input value	A12 value
dA21	Turbidity/SS input value	A21 value
dA22	Turbidity/SS input value	A22 value
nonE	No indication	No indication

TIME 00.00	**Indication time** • Sets the indication time of the displays after the last key operation until displays turn off while in Turbidity/SS Display Mode. Displays remain lit when set to 00.00. Displays light up when any key is pressed while in unlit status. • Not available if nonE (No indication) is selected in [Display selection]. • Setting range: 00.00 (Remains lit) 00.01 to 60.00 (Minutes.Seconds)	00.00 (Remains lit)
A1oF A11□	**A1 output allocation** • Selects A1 output allocation. For A1 output, A11 type, A12 type, A21 type and/or A22 type are allocated. Output is OR output. • Not available if Transmission output (TA option) is ordered. • A11□ : A11 type A12□ : A12 type A21□ : A21 type A22□ : A22 type A1AL : A11, A12 types A2AL : A21, A22 types A1A2 : A11, A21 types A2A2 : A12, A22 types ALL□ : A11, A12, A21, A22 types	A11 type

Character	Setting Item, Function, Setting Range	Factory Default
oon1 0	**Output ON time when A1 output ON** • Sets the output ON time when A1 output is ON. If ON time and OFF time are set, A1 output can be turned ON/OFF in a configured cycle when A1 output is ON. (Fig. 8.4-1) • Not available if Transmission output (TA option) is ordered. • Setting range: 0 to 9999 seconds **Timing chart (Output ON time and OFF time when A1 output is ON)** 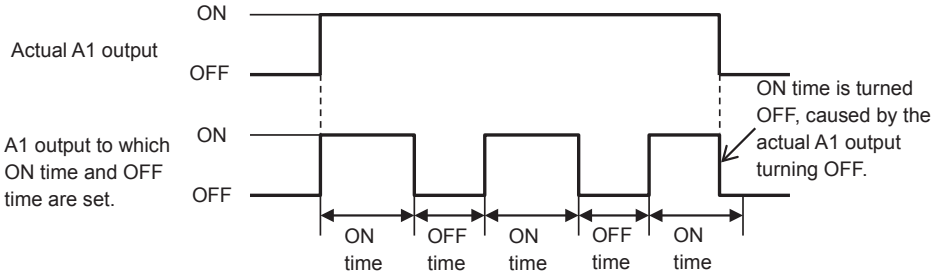 **(Fig. 8.4-1)**	0 seconds
ooF1 0	**Output OFF time when A1 output ON** • Sets the output OFF time when A1 output is ON. If ON time and OFF time are set, A1 output can be turned ON/OFF in a configured cycle when A1 output is ON. See (Fig. 8.4-1). • Not available if Transmission output (TA option) is ordered. • Setting range: 0 to 9999 seconds	0 seconds

9. Calibration

Turbidity/SS Sensor Calibration Mode, Zero and Span Output Signal Adjustment Modes and Transmission Output Adjustment Mode are described below.

9.1 Turbidity/SS Sensor Calibration Mode

9.1.1 Turbidity/SS Sensor Calibration

Before using the Turbidity/SS Sensor, it must be calibrated as follows.
If Loc 1 (Lock 1), Loc2 (Lock 2) or Loc3 (Lock 3) is selected in [Set value lock], the unit will not move to Turbidity/SS Sensor Calibration Mode.

Step	Displays	Operation
①	[Input value] [Set value]	Clean the body of Turbidity/SS Sensor, particularly its lens(es).
②	[Input value] [Set value]	Immerse the Turbidity/SS Sensor in the distilled water or ion-exchanged water.
③	[trby] [AdJt] ↔ [Calibration wait time]	Press and hold the ▽ key and ◎ key (in that order) together for approx. 3 seconds in Turbidity/SS Display Mode. The unit will proceed to Turbidity/SS Sensor Calibration Mode. The Turbidity/SS Display (CH1) indicates trby, and the Setting Display (CH2) indicates AdJt/ Calibration wait time alternately until the time set in [Calibration wait time] has elapsed. (*1) During the time set in [Calibration wait time], the Turbidity/ SS Sensor will adjust to the ambient water temperature.
④	[cAL] [AdJt]	After the time set in [Calibration wait time] has elapsed, calibration automatically starts. During calibration, calibration signal output is turned ON for approx. 3 seconds, indicating cAL on the Turbidity/SS Display (CH1) and AdJt on the Setting Display (CH2). (*2) When calibration signal output is turned from OFF to ON, the Turbidity/SS Sensor will output approx. 2 mA DC of analog signal.
⑤	[cAL] [Good]	After calibration is complete, the calibration signal output is turned OFF, indicating cAL on the Turbidity/SS Display (CH1), and Good on the Setting Display (CH2). When calibration signal output is turned from ON to OFF, the Turbidity/SS Sensor will return to 4 mA DC of analog signal.
⑥	[Input value] [Set value]	Press the SET/RESET key. The unit will revert to Turbidity/SS Display Mode.

(*1) If [Calibration wait time] is set to 0 (zero) minutes, trby is indicated on the Turbidity/SS Display (CH1), and AdJt flashes on the Setting Display (CH2).
Approximately 5 minutes after the Turbidity/SS Sensor has adjusted to the ambient water temperature, calibration can be started by pressing the ◎ key.
After that, refer to steps ④, ⑤ and ⑥.

(*2) If the ◎ key is pressed during the time set in [Calibration wait time], calibration will start.
After that, refer to steps ④, ⑤ and ⑥.

9.1.2 Errors when Calibrating Turbidity/SS Sensor

Errors when calibrating Turbidity/SS Sensor are shown below.
To release the error, press the SET/RESET key. The unit will revert to Turbidity/SS Display Mode.

Displays	Error Contents
[cAL□] [E-21]	The Turbidity/SS Sensor has an output error monitoring function. During calibration, if the output signal from the Turbidity/SS Sensor does not reach approx. 2 mA DC (*), the Turbidity/SS Display (CH1) indicates cAL□ and the Setting Display (CH2) indicates E-21. (*) Before calibration signal output is turned from ON to OFF, if the output signal from the Turbidity/SS Sensor is within 1 to 3 mA DC, it is regarded as normal. If the output signal is outside this range, it is regarded as an error, and the error code is indicated.
[cAL□] [E-22]	After calibration is completed, if the output signal from the Turbidity/SS Sensor does not return to 4 mA DC (*), the Turbidity/SS Display (CH1) indicates cAL□ and Setting Display (CH2) indicates E-22. (*) Approximately 5 seconds after calibration signal output is turned from ON to OFF, if the output signal from the Turbidity/SS Sensor is within 3.5 to 4.5 mA DC, it is regarded as normal. If the output signal is outside this range, it is regarded as an error, and the error code is indicated.

9.2 Zero and Span Output Signal Adjustment Modes

9.2.1 Adjusting Zero and Span Output Signals

⚠ Caution

- **Be sure to calibrate Turbidity/SS Sensor before adjusting Zero and Span output signals.**
- **Be sure to adjust Span output signal after Zero output signal is adjusted.**

Before using this instrument, adjust Zero and Span output signals as follows.
If Loc1 (Lock 1), Loc2 (Lock 2) or Loc3 (Lock 3) is selected in [Set value lock], the unit cannot move to Zero or Span Output Signal Adjustment Mode.

Step	Displays	Operation
①	[Input value] [Set value]	Clean the body of Turbidity/SS Sensor, particularly its lens(es).
②	[Input value] [Set value]	Immerse the Turbidity/SS Sensor in the distilled water or ion-exchanged water.
③	[Input value] [ZEro] ↔ [Zero output signal adjustment value]	Press and hold the △ key and ◎ key (in that order) together for approx. 3 seconds in Turbidity/SS Display Mode. The unit will proceed to Zero Output Signal Adjustment Mode, indicating a Turbidity/SS input value on the Turbidity/SS Display (CH1), and ZEro/Zero output signal adjustment value alternately on the Setting Display (CH2).
④	[Input value] [ZEro] ↔ [Zero output signal adjustment value]	Approximately 5 minutes after the Turbidity/SS Sensor adjusts to the ambient water temperature, check the Turbidity/SS input value. If the Turbidity/SS input value does not show 0 (zero), set the Zero output signal adjustment value with the △ or ▽ key so that the Turbidity/SS input value becomes 0 (zero). Setting range of Zero output signal adjustment value: ±5% of measurement span Zero output signal adjustment is now completed.

Step	Displays	Operation
⑤	[Input value] [SPAn] ↔ [Span output signal adjustment value]	Press the SET/RESET key in Zero Output Signal Adjustment Mode. The unit will proceed to Span Output Signal Adjustment Mode, indicating the Turbidity/SS input value on the Turbidity/SS Display (CH1), and SPAn/Span output signal adjustment value alternately on the Setting Display (CH2).
⑥	[Input value] [SPAn] ↔ [Span output signal adjustment value]	Block the light beam between the lenses of the sensor for more than 30 seconds. **[Be careful not to touch the lens(es).]** If the Turbidity/SS input value (*) does not show measurement range high limit, set the Span output signal adjustment value with the △ or ▽ key so that the input value becomes measurement range high limit value. Setting range of Span output signal adjustment value: ±5% of measurement span Span output signal adjustment is now completed.
⑦	[Input value] [Set value]	Press the SET/RESET key. The unit will revert to Turbidity/SS Display Mode.

(*) When the SS Sensor TS-MxS-A is used, set the Span output signal adjustment value so that the Turbidity/SS input value becomes 5000.
The measurement range of the SS Sensor TS-MxS-A is 0 to 50000 mg/L (Kaolin).
As the Turbidity/SS Display (CH1) has 4 digits, the value 10000 mg/L or higher cannot be indicated.
Therefore, the ones digit of current Turbidity/SS input value is rounded off, divided by 10, and then indicated.
As the measurement range high limit is 50000 mg/L, set the Span output signal adjustment value so that the Turbidity/SS input value becomes 5000

9.2.2 Errors when Adjusting Zero and Span Output Signals

Errors when adjusting Zero and Span output signals are shown below.
To release the error, press the SET/RESET key. The unit will revert to Turbidity/SS Display Mode.

Displays	Error Contents
[E-24] ↔ [Input value] [ZEro] ↔ [Zero output signal adjustment value]	While adjusting Zero output signal, if the Turbidity/SS input value has become lower than the value equivalent to 3.5 mA DC, the Turbidity/SS Display (CH1) will indicate E-24/Turbidity/SS input value alternately, and the Setting Display (CH2) will indicate ZEro/Zero output signal adjustment value alternately.
[E-23] ↔ [Input value] [SPAn] ↔ [Span output signal adjustment value]	While adjusting Span output signal, if the Turbidity/SS input value has exceeded the value equivalent to 20.5 mA DC, the Turbidity/SS Display (CH1) will indicate E-23/ Turbidity/SS input value alternately, and the Setting Display (CH2) will indicate SPAn/Span output signal adjustment value alternately.

9.3 Transmission Output Adjustment Mode

Fine adjustment of Transmission output is performed.
The WIL-101-TU is adjusted at the factory, however, differences may occur between the indication value of the connected equipment (recorders, etc.) and output value of this instrument.
In this case, perform Transmission output Zero adjustment and Span adjustment.
Available when Transmission output (TA option) is ordered.

The unit cannot enter Transmission output Zero adjustment mode while in Zero output signal adjustment mode, Span output signal adjustment mode or Turbidity/SS Sensor calibration mode.

The following outlines the procedure for Transmission output adjustment.

(1) Press and hold the △ and SET/RESET key (in that order) together for approx. 3 seconds in Turbidity/SS Display Mode.
The unit enters Transmission output Zero adjustment mode, and indicates the following.

Display	Indication Contents
Turbidity/SS Display (CH1)	AJ3
Setting Display (CH2)	Transmission output Zero adjustment value

(2) Set Transmission output Zero adjustment value with the △ or ▽ key, while viewing the value indicated on the connected equipment (recorders, etc.).
Setting range: ±5.00% of Transmission output span

(3) Press the SET/RESET key.
The unit enters Transmission output Span adjustment mode, and indicates the following.

Display	Indication Contents
Turbidity/SS Display (CH1)	AJ4
Setting Display (CH2)	Transmission output Span adjustment value

(4) Set Transmission output Span adjustment value with the △ or ▽ key, while viewing the value indicated on the connected equipment (recorders, etc.).
Setting range: ±5.00% of Transmission output span

(5) Press the ◯ key.
The unit returns to Transmission output Zero adjustment mode.
Repeat steps (2) to (5) if necessary.

(6) To finish Transmission output adjustment, press the SET/RESET key in Transmission output Span adjustment mode.
The unit reverts to Turbidity/SS Display Mode.

10. Measurement

10.1 Starting Measurement

For approx. 4 seconds after the power is switched ON, the input type is indicated on the Turbidity/SS Display (CH1). (Table 10.1-1)

During this time, all outputs are in OFF status, and all LED indicators – except the Setting Display (CH2) and PWR indicator – turn off.

After that, measurement starts, indicating Turbidity/SS input value on the Turbidity/SS Display (CH1), and the item selected in [Display selection (p.30)] on the Setting Display (CH2).

This status is called Turbidity/SS Display Mode.

(Table 10.1-1)

Measurement Range	Turbidity/SS Display (CH1)
0.0 to 100.0 (Formazin)	TU□1
0 to 500 (Formazin)	TU□5
0 to 3000 (Formazin)	TU30
0 to 1000 mg/L (Kaolin)	TU41
0 to 50000 mg/L (Kaolin) (*)	TU45

(*) The measurement range of the SS Sensor TS-MxS-A is 0 to 50000 mg/L (Kaolin).
As the Turbidity/SS Display (CH1) has 4 digits, the value 10000 mg/L or higher cannot be indicated.
Therefore, the ones digit of current Turbidity/SS input value is rounded off, divided by 10, and then indicated.
(e.g.) 25004 mg/L (Kaolin): Indicated as 2500.
25005 mg/L (Kaolin): Indicated as 2501.

10.2 A□□ Output

When TU_L (Turbidity/SS input low limit action), TU_H (Turbidity/SS input high limit action) is selected in [A11, A12, A21, A22 type (pp. 21, 22)], A□□ output is turned ON if Turbidity/SS input value exceeds the A□□ value.

When TUHL (Turbidity/SS input High/Low limits independent action) is selected in [A11, A12, A21, A22 type (pp. 21, 22)], A□□ output is turned ON if Turbidity/SS input value exceeds the A□□ High/Low limits upper side value, or drops below A□□ High/Low limits lower side value.

A1 output is turned ON depending on the settings in [A1 output allocation (p.30)] and [Output ON/OFF time when A1 output ON (p.31)].

If ON time and OFF time are set, A1 output can be turned ON/OFF in a configured cycle when A1 output is ON. (Fig. 10.2-1)

Timing chart (Output ON time and OFF time when A1 output is ON)

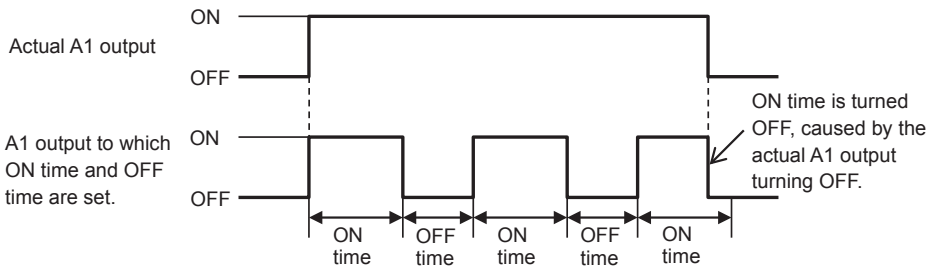

(Fig. 10.2-1)

A□□ output status can be read by reading Status flag 1 (A11, A12, A21, A22 output flag bit) in Serial communication.
A□□ output status, when input errors occur, differs depending on the selection in [A□□ output when input errors occur (p.19)].

- If oFF (Disabled) is selected, A□□ output and A□□ output status will be turned OFF when input errors occur.
- If on (Enabled) is selected, A□□ output and A□□ output status will be maintained when input errors occur.

10.3 Errors during Measurement

Errors during measurement are shown below.

Displays	Error Contents
[Input value] [E- 11]	When Self-check output from the Turbidity/SS Sensor is received, the Turbidity Display (CH1) indicates the Turbidity/SS input value, and the Setting Display (CH2) flashes E- 11.
[Input value] [E- 12]	When analog signal (+ white, – black) cable of Turbidity/SS Sensor is disconnected or short-circuited, the Turbidity/SS Display (CH1) indicates the Turbidity/SS input value, and the Setting Display (CH2) flashes E- 12.
[Input value] [E- 13]	When Turbidity/SS input value has exceeded the value equivalent to 20.5 mA DC, the Turbidity/SS Display (CH1) indicates the Turbidity/SS input value equivalent to 20.5 mA DC, and the Setting Display (CH2) flashes E- 13.
[Input value] [E- 14]	When Turbidity/SS input value has become lower than the value equivalent to 3.5 mA DC, the Turbidity/SS Display (CH1) indicates the Turbidity/SS input value equivalent to 3.5 mA DC, and the Setting Display (CH2) flashes E- 14.

11. Communication

11.1 System Configuration Example

• When using the USB Communication Cable CMC-001-3 (sold separately)

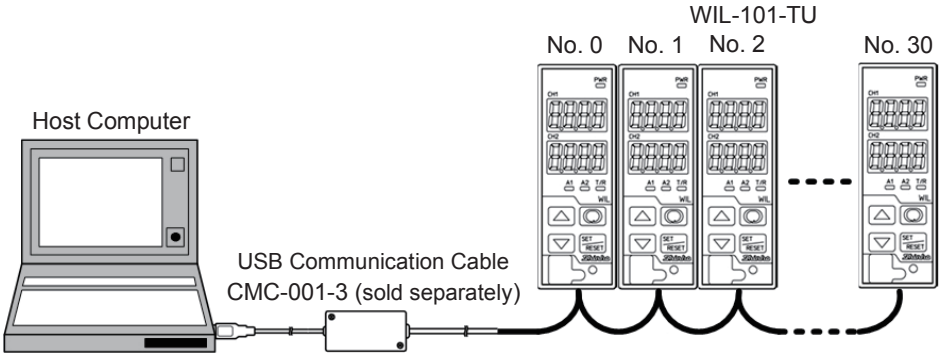

(Fig. 11.1-1)

• When using the Communication Converter IF-400 (sold separately)

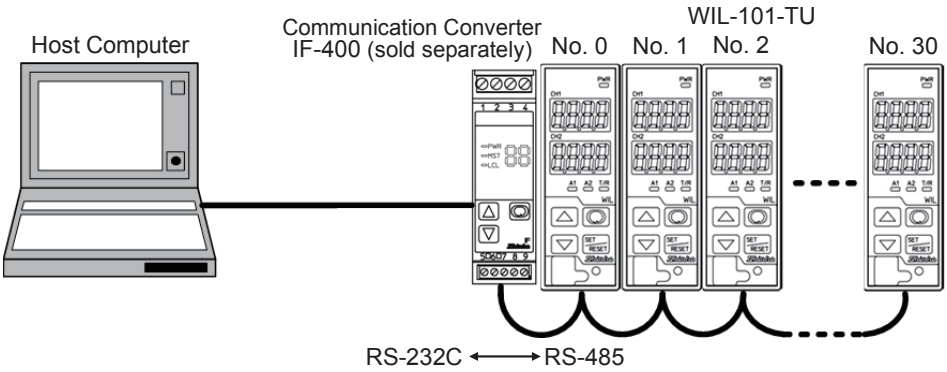

(Fig. 11.1-2)

11.2 Setting Method of This Instrument

Communication parameters can be set in the Basic Function Group.
To enter the Basic Function Group, follow the procedure below.

① a.r.E.r Press the key 3 times in Turbidity/SS Display Mode.
② cnhL Press the SET/RESET key twice. 'Communication protocol' will appear.
③ Set each item. (Use the △ or ▽ key for settings, and register the value with the SET/RESET key.)

Character	Setting Item, Function, Setting Range	Factory Default
cnhL nonL	**Communication protocol** • Selects communication protocol. • nonL : Shinko protocol nodA : MODBUS ASCII mode nodr : MODBUS RTU mode	Shinko protocol
cnno □□□0	**Instrument number** • Sets the instrument number. The instrument numbers should be set one by one when multiple instruments are connected in Serial communication, otherwise communication is impossible. • Setting range: 0 to 95	0
cnsP □□96	**Communication speed** • Selects a communication speed equal to that of the host computer. • □□96 : 9600 bps □192 : 19200 bps □384 : 38400 bps	9600 bps

Character	Setting Item, Function, Setting Range	Factory Default
cnFt 7Eun	**Data bit/Parity** • Selects data bit and parity. • 8non : 8 bits/No parity 7non : 7 bits/No parity 8Eun : 8 bits/Even 7Eun : 7 bits/Even 8odd : 8 bits/Odd 7odd : 7 bits/Odd	7 bits/Even
cnSt 1	**Stop bit** • Selects the stop bit. • 1 : 1 bit 2 : 2 bits	1 bit

④ Press the SET/RESET key multiple times. The unit reverts to Turbidity/SS Display Mode.

11.3 Communication Procedure

Communication starts with command transmission from the host computer (hereafter Master) and ends with the response of the WIL-101-TU (hereafter Slave).

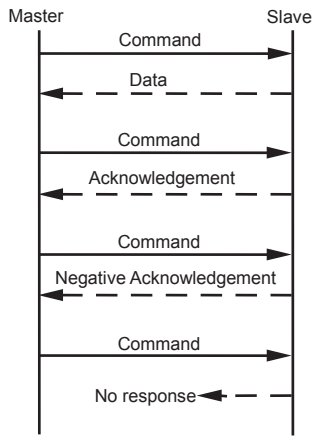

(Fig.11.3-1)

- **Response with Data**
  When the master sends the reading command, the slave responds with the corresponding set value or current status.
- **Acknowledgement**
  When the master sends the setting command, the slave responds by sending acknowledgement after the processing is terminated.
- **Negative Acknowledgement**
  When the master sends a non-existent command or value out of the setting range, the slave returns a negative acknowledgement.
- **No Response**
  The slave will not respond to the master in the following cases:
  - Global address (Shinko protocol) is set.
  - Broadcast address (MODBUS protocol) is set.
  - Communication error (framing error, parity error)
  - Checksum error (Shinko protocol), LRC discrepancy (MODBUS ASCII mode), CRC-16 discrepancy (MODBUS RTU mode)

Communication Timing of the RS-485

Master Side (Take note while programming)

When the master starts transmission through the RS-485 communication line, the master is arranged so as to provide an idle status (mark status) transmission period of 1 or more characters before sending the command to ensure synchronization on the receiving side.
Set the program so that the master can disconnect the transmitter from the communication line within a 1 character transmission period after sending the command in preparation for reception of the response from the slave.
To avoid collision of transmissions between the master and the slave, send the next command after carefully checking that the master has received the response.
If a response to the command is not returned due to communication errors, set the Retry Processing to send the command again. (It is recommended to execute Retry twice or more.)

Slave Side

When the slave starts transmission through the RS-485 communication line, the slave is arranged so as to provide an idle status (mark status) transmission period of 1 or more characters before sending the response to ensure synchronization on the receiving side.
The slave is arranged so as to disconnect the transmitter from the communication line within a 1 character transmission period after sending the response.

11.4 Shinko Protocol

11.4.1 Transmission Mode

Shinko protocol is composed of ASCII.
Hexadecimal (0 to 9, A to F), which is divided into high order (4-bit) and low order (4-bit) out of 8-bit binary data in command is transmitted as ASCII characters.

Data format Start bit: 1 bit
Data bit: 7 bits
Parity: Even
Stop bit: 1 bit

Error detection: Checksum

11.4.2 Command Configuration

All commands are composed of ASCII.
The data (set value, decimal number) is represented by hexadecimal numbers.
The negative numbers are represented in 2's complement.
Numerals written below the command represent number of characters.

(1) Setting Command

Header (02H)	Address	Sub address (20H)	Command type (50H)	Data item	Data	Checksum	Delimiter (03H)
1	1	1	1	4	4	2	1

(2) Reading Command

Header (02H)	Address	Sub address (20H)	Command type (20H)	Data item	Checksum	Delimiter (03H)
1	1	1	1	4	2	1

(3) Response with Data

Header (06H)	Address	Sub address (20H)	Command type (20H)	Data item	Data	Checksum	Delimiter (03H)
1	1	1	1	4	4	2	1

(4) Acknowledgement

Header (06H)	Address	Checksum	Delimiter (03H)
1	1	2	1

(5) Negative Acknowledgement

Header (15H)	Address	Error code	Checksum	Delimiter (03H)
1	1	1	2	1

Header: Control code to represent the beginning of the command or the response.
ASCII codes are used.
Setting command, Reading command: STX (02H) fixed
Response with data, Acknowledgement: ACK (06H) fixed
Negative acknowledgement: NAK (15H) fixed

Instrument Number (Address): Numbers by which the master discerns each slave.
Instrument number 0 to 94 and Global address 95.
ASCII codes (20H to 7FH) are used by adding 20H to instrument numbers 0 to 95 (00H to 5FH).
95 (7FH) is called Global address, which is used when the same command is sent to all the slaves connected. However, the response is not returned.

Sub Address: 20H fixed

Command Type: Code to discern Setting command (50H) and Reading command (20H)

Data Item: Classification of the command object.
Composed of 4-digit hexadecimal numbers, using ASCII.
[Refer to “11.6. Communication Command Table”. (pp. 46 to 51)]

Data: The contents of data (set value) differ depending on the setting command.
Composed of 4-digit hexadecimal numbers, using ASCII.
[Refer to “11.6. Communication Command Table”. (pp. 46 to 51)]

Checksum: 2-character data to detect communication errors.
Refer to “11.4.3 Checksum Calculation”.

Delimiter: Control code to represent the end of command.
ASCII code ETX (03H) fixed.

Error Code: Represents an error type using ASCII.
1 (31H)-----Non-existent command
2 (32H)-----Not used
3 (33H)-----Value outside the setting range
4 (34H)-----Status unable to be set [(e.g.) During Turbidity/SS Sensor calibration mode, Zero output signal adjustment mode, Span output signal adjustment mode, etc.]
5 (35H)-----During setting mode by keypad operation

11.4.3 Checksum Calculation

Checksum is used to detect receiving errors in the command or data.
Set the program for the master side as well to calculate the checksum of the response data from the slaves so that communication errors can be checked.
The ASCII code (hexadecimal) corresponding to the characters which range from the address to that before the checksum is converted to binary notation, and the total value is calculated.
The lower one byte of the total value is converted to 2’s complement, and then to hexadecimal numbers, that is, ASCII code for the checksum.

- 1’s complement: Reverse each binary bit. 0 will become 1 and vice versa.
- 2’s complement: Add 1 to 1’s complement.

Checksum Calculation Example

A11 ON delay time: 100 seconds (0064H)
Address (instrument number): 0 (20H)

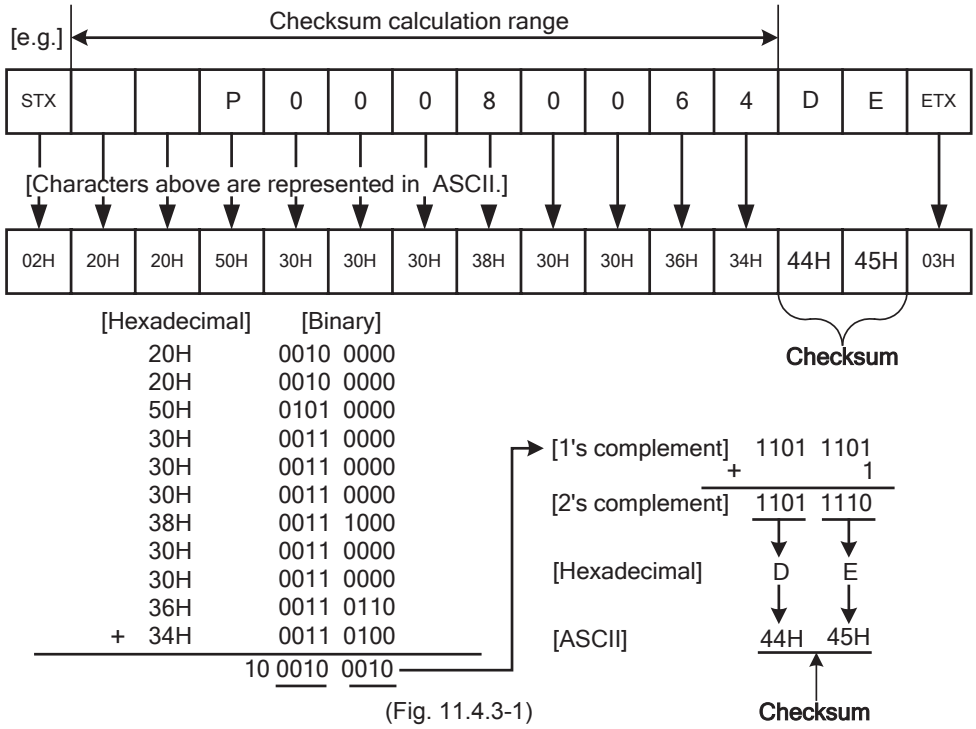

(Fig. 11.4.3-1)

11.5 MODBUS Protocol

11.5.1 Transmission Mode

There are 2 transmission modes (ASCII and RTU) in MODBUS protocol.

ASCII Mode

Hexadecimal (0 to 9, A to F), which is divided into high order (4-bit) and low order (4-bit) out of 8-bit binary data in command is transmitted as ASCII characters.

Data format Start bit: 1 bit
Data bit: 7 bits (8 bits) (Selectable)
Parity: Even (No parity, Odd) (Selectable)
Stop bit: 1 bit (2 bits) (Selectable)

Error detection : LRC (Longitudinal Redundancy Check)

RTU Mode

8-bit binary data in command is transmitted as it is.

Data format Start bit: 1 bit
Data bit: 8 bits
Parity: No parity (Even, Odd) (Selectable)
Stop bit: 1 bit (2 bits) (Selectable)

Error detection: CRC-16 (Cyclic Redundancy Check)

11.5.2 Data Communication Interval

ASCII Mode

Max.1 second of interval between ASCII mode characters

RTU Mode

Communication speed 9600 bps, 19200 bps:

To transmit continuously, an interval between characters which consist of one message, must be within 1.5-character transmission times.

Communication speed 38400 bps:

To transmit continuously, an interval between characters which consist of one message, must be within 750 μs.

If an interval lasts longer than 1.5-character transmission times or 750 μs, the WIL-101-TU assumes that transmission from the master is finished, which results in a communication error, and will not return a response.

11.5.3 Message Configuration

ASCII Mode

ASCII mode message is configured to start by Header [: (colon) (3AH)] and end by Delimiter [CR (carriage return) (0DH) + LF (Line feed) (0AH)].

Header (:)	Slave address	Function code	Data	Error check LRC	Delimiter (CR)	Delimiter (LF)

RTU Mode

Communication speed 9600 bps, 19200 bps: RTU mode is configured to start after idle time is processed for more than 3.5-character transmissions, and end after idle time is processed for more than 3.5-character transmissions.

Communication speed 38400 bps: RTU mode is configured to start after idle time is processed for more than 1.75 ms, and end after idle time is processed for more than 1.75 ms.

3.5 idle characters	Slave address	Function code	Data	Error check CRC-16	3.5 idle characters

(1) Slave Address

Slave address is an individual instrument number on the slave side, and is set within the range 0 to 95 (00H to 5FH). The master identifies slaves by the slave address of the requested message.

The slave informs the master which slave is responding to the master by placing its own address in the response message.
Slave address 00H (Broadcast address) can identify all the slaves connected. However, slaves do not respond.

(2) Function Code

The function code is the command code for the slave to undertake one of the following actions.

(Table 11.5.3-1)

Function Code	Contents
03 (03H)	Reading the set value and information from slaves
06 (06H)	Setting to slaves

The Function code is used to discern whether the response is normal (acknowledgement) or if any error (negative acknowledgement) has occurred when the slave returns the response message to the master.
When acknowledgement is returned, the slave simply returns the original function code.
When negative acknowledgement is returned, the MSB of the original function code is set as 1 for the response.
(For example, if the master sends request message setting 10H to the function code by mistake, slave returns 90H by setting the MSB to 1, because the former is an illegal function.)
For negative acknowledgement, the exception codes below are set to the data of the response message, and returned to the master in order to inform it of what kind of error has occurred. (Table 11.5.3-2)

(Table 11.5.3-2)

Exception Code	Contents
1 (01H)	Illegal function (Non-existent function)
2 (02H)	Illegal data address (Non-existent data address)
3 (03H)	Illegal data value (Value out of the setting range)
17 (11H)	Shinko protocol error code 4 [Status unable to be set. (e.g.) During Turbidity/SS Sensor calibration mode, Zero output signal adjustment mode, Span output signal adjustment mode, etc.]
18 (12H)	Shinko protocol error code 5 (During setting mode by keypad operation)

(3) Data

Data differs depending on the function code.
A request message from the master is composed of a data item, amount of data and setting data.
A response message from the slave is composed of the byte count, data and exception codes in negative acknowledgements.
The effective range of data is -32768 to 32767 (8000H to 7FFFH).

(4) Error Check

ASCII Mode

After calculating LRC (Longitudinal Redundancy Check) from the slave address to the end of data, the calculated 8-bit data is converted to two ASCII characters, and are appended to the end of message.

How to calculate LRC

① Create a message in RTU mode.
② Add all the values from the slave address to the end of data. This is assumed as X.
③ Make a complement for X (bit reverse). This is assumed as X.
④ Add a value of 1 to X. This is assumed as X.
⑤ Set X as an LRC to the end of the message.
⑥ Convert the whole message to ASCII characters.

RTU Mode

After calculating CRC-16 (Cyclic Redundancy Check) from the slave address to the end of the data, the calculated 16-bit data is appended to the end of message in sequence from low order to high order.

How to calculate CRC-16

In the CRC-16 system, the information is divided by the polynomial series. The remainder is added to the end of the information and transmitted. The generation of a polynomial series is as follows. (Generation of polynomial series: $X^{16} + X^{15} + X^{2} + 1$)

① Initialize the CRC-16 data (assumed as X) (FFFFH).
② Calculate exclusive OR (XOR) with the 1st data and X. This is assumed as X.
③ Shift X one bit to the right. This is assumed as X.
④ When a carry is generated as a result of the shift, XOR is calculated by X of ③ and the fixed value (A001H). This is assumed as X. If a carry is not generated, go to step ⑤.
⑤ Repeat steps ③ and ④ until shifting 8 times.
⑥ XOR is calculated with the next data and X. This is assumed as X.
⑦ Repeat steps ③ to ⑤.
⑧ Repeat steps ③ to ⑤ up to the final data.
⑨ Set X as CRC-16 to the end of message in sequence from low order to high order.

11.5.4 Message Example

ASCII Mode

Numerals written below the command represent the number of characters.

① **Reading [Slave address 1, Data item 0080H (Turbidity/SS input value)]**

• A request message from the master
Amount of data means how many data items are to be read. It is fixed as (30H 30H 30H 31H).

Header	Slave address	Function code	Data item [0080H]	Amount of data [0001H]	Error check LRC	Delimiter
(3AH)	(30H 31H)	(30H 33H)	(30H 30H 38H 30H)	(30H 30H 30H 31H)	(37H 42H)	(0DH 0AH)
1	2	2	4	4	2	2

• Response message from the slave in normal status [When turbidity is 10.0 (Formazin) (0064H)]
The response byte count means the byte count of data which have been read. It is fixed as (30H 32H).

Header	Slave address	Function code	Response byte count [02H]	Data [0064H]	Error check LRC	Delimiter
(3AH)	(30H 31H)	(30H 33H)	(30H 32H)	(30H 30H 36H 34H)	(39H 36H)	(0DH 0AH)
1	2	2	2	4	2	2

• Response message from the slave in exception (error) status (When a data item is incorrect)
The function code MSB is set to 1 for the response message in exception (error) status (83H is returned). The exception code 02H (Non-existent data address) is returned (error).

Header	Slave address	Function code	Exception code [02H]	Error check LRC	Delimiter
(3AH)	(30H 31H)	(38H 33H)	(30H 32H)	(37H 41H)	(0DH 0AH)
1	2	2	2	2	2

② **Setting [Slave address 1, Data item 0008H (A11 ON delay time)**

• A request message from the master [When A11 ON delay time is set to 100 seconds (0064H)]

Header	Slave address	Function code	Data item [0008H]	Data [0064H]	Error check LRC	Delimiter
(3AH)	(30H 31H)	(30H 36H)	(30H 30H 30H 38H)	(30H 30H 36H 34H)	(38H 44H)	(0DH 0AH)
1	2	2	4	4	2	2

• Response message from the slave in normal status

Header	Slave address	Function code	Data item [0008H]	Data [0064H]	Error check LRC	Delimiter
(3AH)	(30H 31H)	(30H 36H)	(30H 30H 30H 38H)	(30H 30H 36H 34H)	(38H 44H)	(0DH 0AH)
1	2	2	4	4	2	2

• Response message from the slave in exception (error) status (When a value out of the setting range is set.)

The function code MSB is set to 1 for the response message in exception (error) status (86H is returned). The exception code 03H (Value out of the setting range) is returned (error).

Header	Slave address	Function code	Exception code [03H]	Error check LRC	Delimiter
(3AH)	(30H 31H)	(38H 36H)	(30H 33H)	(37H 36H)	(0DH 0AH)
1	2	2	2	2	2

RTU Mode

Numerals written below the command represent number of characters.

① **Reading [Slave address 1, Data item 0080H (Turbidity/SS input value)]**

• A request message from the master

Amount of data means how many data items are to be read. It is fixed as (0001H).

3.5 idle characters	Slave address	Function code	Data item	Amount of data	Error check CRC-16	3.5 idle characters
	(01H)	(03H)	(0080H)	(0001H)	(85E2H)	
	1	1	2	2	2	

• Response message from the slave in normal status [When turbidity is 100.0 (Formazin) (0064H)]

The response byte count means the byte count of data which has been read. It is fixed as (02H).

3.5 idle characters	Slave address	Function code	Response byte count	Data	Error check CRC-16	3.5 idle characters
	(01H)	(03H)	(02H)	(0064H)	(B9AFH)	
	1	1	1	2	2	

• Response message from the slave in exception (error) status (When a data item is incorrect)

The function code MSB is set to 1 for the response message in exception (error) status (83H is returned).

The exception code (02H: Non-existent data address) is returned (error).

3.5 idle characters	Slave address	Function code	Exception code	Error check CRC-16	3.5 idle characters
	(01H)	(83H)	(02H)	(C0F1H)	
	1	1	1	2	

② **Setting (Slave address 1, Data item 0008H (A11 ON delay time)**

• A request message from the master [When A11 ON delay time is set to 100 seconds (0064H)]

3.5 idle characters	Slave address	Function code	Data item	Data	Error check CRC-16	3.5 idle characters
	(01H)	(06H)	(0008H)	(0064H)	(D9E3H)	
	1	1	2	2	2	

• Response message from the slave in normal status

3.5 idle characters	Slave address	Function code	Data item	Data	Error check CRC-16	3.5 idle characters
	(01H)	(06H)	(0008H)	(0064H)	(D9E3H)	
	1	1	2	2	2	

• Response message from the slave in exception (error) status (When a value out of the setting range is set)

The function code MSB is set to 1 for the response message in exception (error) status (86H is returned.).

The exception code (03H: Value out of the setting range) is returned (error).

3.5 idle characters	Slave address	Function code	Exception code	Error check CRC-16	3.5 idle characters
	(01H)	(86H)	(03H)	(0261H)	
	1	1	1	2	

11.6 Communication Command Table

11.6.1 Notes about Setting/Reading Command

- The data (set value, decimal) is converted to hexadecimal numbers.
  A negative number is represented in 2's complement.
- When connecting multiple slaves, the address (instrument number) must not be duplicated.
- Data items 0200H to 0209H (User save area 1 to 10) can be read or set in 1 word units.
  Effective range of data is -32768 to 32767 (8000H to 7FFFH).
- MODBUS protocol uses Holding Register addresses. The Holding Register addresses are created as follows. A Shinko command data item is converted to decimal number, and the offset of 40001 is added. The result is the Holding Register address.
  Using Data item 0008H (A11 ON delay time) as an example:
  Data item in the sending message is 0008H, however, MODBUS protocol Holding Register address is 40009 (8 + 40001).
- Even if options are not ordered, setting or reading via software communication will be possible.
  Command contents of A11, A12, A21 and A22 will function. However, command contents of Transmission output will not function.

(1) Setting Command

- Up to 1,000,000 (one million) entries can be stored in non-volatile IC memory.
  If the number of settings exceeds the limit, the data will not be saved. So, ensure the set values are not frequently changed via software communication. (If a value set via software communication is the same as the value before the setting, the value will not be written in non-volatile IC memory.)
- Be sure to select Lock 3 when changing the set value frequently via software communication. If Lock 3 is selected, all set values – except Measurement range, Measurement unit, Span setting, Zero and Span output signal adjustments, Turbidity/SS Sensor calibration, Transmission output Zero and Span adjustments – can be temporarily changed. However, they revert to their previous value after the power is turned off because they are not saved in the non-volatile IC memory.
  Do not change setting items (A11, A12, A21, A22 types). If they are changed, they will affect other setting items.
- Setting range of each item is the same as that of keypad operation.
- When the data (set value) has a decimal point, a whole number (hexadecimal) without a decimal point is used.
- If A11, A12, A21 or A22 type is changed at Data item 0005H (A11 type), 0050H (A12 type), 0051H (A21 type) or 0052H (A22 type), the A11, A12, A21 or A22 value will default to 0 (zero). The output status of A11, A12, A21 or A22 will also be initialized.
- Settings via software communication are possible while in Set value lock status.
- Communication parameters such as Instrument Number, Communication Speed of the slave cannot be set by software communication. They can only be set via the keypad. (pp.38, 39)
- When sending a command by Global address [95 (7FH), Shinko protocol] or Broadcast address [00H, MODBUS protocol], the same command is sent to all the slaves connected. However, the response is not returned.

(2) Reading Command

- When the data (set value) has a decimal point, a whole number (hexadecimal) without a decimal point is used for a response.

11.6.2 Setting/Reading Command

Shinko Command Type	MODBUS Function Code	Data Item		Data
50H/20H	06H/03H	0004H	Measurement range	

Data	Measurement Range	Model
0000H	0.0 to 100.0 (Formazin)	Turbidity Sensor TC-100
0001H	0 to 500 (Formazin)	Turbidity Sensor TC-500
0002H	0 to 3000 (Formazin)	Turbidity Sensor TC-3000
0003H	0 to 1000 mg/L (Kaolin)	SS Sensor TCS-1000(E)
0004H	0 to 50000 mg/L (Kaolin)	SS Sensor TS-MxS-A

Shinko Command Type	MODBUS Function Code	Data Item		Data
50H/20H	06H/03H	0005H	A11 type	0000H: No action 0001H: Turbidity/SS input low limit action 0002H: Turbidity/SS input high limit action 0003H: Error output 0004H: Fail output 0005H: Turbidity/SS input High/Low limits independent action
50H/20H	06H/03H	0006H	A11 value	Set value
50H/20H	06H/03H	0007H	A11 ON side	Set value
50H/20H	06H/03H	0008H	A11 ON delay time	Set value
50H/20H	06H/03H	0009H	A11 OFF delay time	Set value
50H/20H	06H/03H	000AH	Turbidity/SS input filter time constant	Set value
50H/20H	06H/03H	000CH	Turbidity/SS inputs for moving average	Set value
50H/20H	06H/03H	000DH	Calibration wait time	Set value
50H/20H	06H/03H	0030H	Set value lock	0000H: Unlock 0001H: Lock 1 0002H: Lock 2 0003H: Lock 3
50H/20H	06H/03H	0032H	Transmission output high limit	Set value
50H/20H	06H/03H	0033H	Transmission output low limit	Set value
50H/20H	06H/03H	0034H	Auto-light function	0000H: Disabled 0001H: Enabled
50H/20H	06H/03H	0035H	Display selection	

Data	Turbidity/SS Display (CH1)	Setting Display (CH2)
0000H	Turbidity/SS input value	No indication
0001H	Turbidity/SS input value	A11 value
0002H	Turbidity/SS input value	A12 value
0003H	Turbidity/SS input value	A21 value
0004H	Turbidity/SS input value	A22 value
0005H	No indication	No indication

Shinko Command Type	MODBUS Function Code	Data Item		Data
50H/20H	06H/03H	0036H	Indication time	Set value
50H	06H	0040H	Turbidity/SS Sensor calibration mode	0000H: Turbidity/SS Display Mode 0001H: Turbidity/SS Sensor calibration mode
50H	06H	0041H	Calibration signal output	0001H: Calibration signal output
50H	06H	0042H	Output signal adjustment mode	0000H: Turbidity/SS Display Mode 0001H: Zero output signal adjustment mode 0002H: Span output signal adjustment mode
50H/20H	06H/03H	0043H	Zero output signal adjustment value	Set value
50H/20H	06H/03H	0044H	Span output signal adjustment value	Set value
50H/20H	06H/03H	0045H	A□□ output when input errors occur	0000H: Enabled 0001H: Disabled

Shinko Command Type	MODBUS Function Code	Data Item		Data
50H/20H	06H/03H	0048H	Output ON time when A1 output ON	Set value
50H/20H	06H/03H	0049H	Output OFF time when A1 output ON	Set value
50H/20H	06H/03H	0050H	A12 type	0000H: No action 0001H: Turbidity/SS input low limit action 0002H: Turbidity/SS input high limit action 0003H: Error output 0004H: Fail output 0005H: Turbidity/SS input High/Low limits independent action
50H/20H	06H/03H	0051H	A21 type	0000H: No action 0001H: Turbidity/SS input low limit action 0002H: Turbidity/SS input high limit action 0003H: Error output 0004H: Fail output 0005H: Turbidity/SS input High/Low limits independent action
50H/20H	06H/03H	0052H	A22 type	0000H: No action 0001H: Turbidity/SS input low limit action 0002H: Turbidity/SS input high limit action 0003H: Error output 0004H: Fail output 0005H: Turbidity/SS input High/Low limits independent action
50H/20H	06H/03H	0053H	A12 value	Set value
50H/20H	06H/03H	0054H	A21 value	Set value
50H/20H	06H/03H	0055H	A22 value	Set value
50H/20H	06H/03H	0056H	A12 ON side	Set value
50H/20H	06H/03H	0057H	A21 ON side	Set value
50H/20H	06H/03H	0058H	A22 ON side	Set value
50H/20H	06H/03H	0059H	A12 ON delay time	Set value
50H/20H	06H/03H	005AH	A21 ON delay time	Set value
50H/20H	06H/03H	005BH	A22 ON delay time	Set value
50H/20H	06H/03H	005CH	A12 OFF delay time	Set value
50H/20H	06H/03H	005DH	A21 OFF delay time	Set value
50H/20H	06H/03H	005EH	A22 OFF delay time	Set value
50H/20H	06H/03H	0068H	Turbidity/SS input sensor correction	Set value
50H/20H	06H/03H	006AH	A1 output allocation	0000H: A11 type 0001H: A12 type 0002H: A21 type 0003H: A22 type 0004H: A11, A12 types 0005H: A21, A22 types 0006H: A11, A21 types 0007H: A12, A22 types 0008H: A11, A12, A21, A22 types
50H	06H	007FH	Key operation change flag clearing	0001H: Clear change flag
50H/20H	06H/03H	0100H	A11 hysteresis type	0000H: Medium Value 0001H: Reference Value
50H/20H	06H/03H	0101H	A12 hysteresis type	0000H: Medium Value 0001H: Reference Value

Shinko Command Type	MODBUS Function Code	Data Item		Data
50H/20H	06H/03H	0102H	A21 hysteresis type	0000H: Medium Value 0001H: Reference Value
50H/20H	06H/03H	0103H	A22 hysteresis type	0000H: Medium Value 0001H: Reference Value
50H/20H	06H/03H	0104H	A11 OFF side	Set value
50H/20H	06H/03H	0105H	A12 OFF side	Set value
50H/20H	06H/03H	0106H	A21 OFF side	Set value
50H/20H	06H/03H	0107H	A22 OFF side	Set value
50H/20H	06H/03H	0108H	Measurement unit	0000H: Formazin 0001H: Kaolin (mg/L)
50H/20H	06H/03H	0109H	Span setting	Set value
50H/20H	06H/03H	010FH	Transmission output status when calibrating	0000H: Last value HOLD 0001H: Set value HOLD 0002H: Measured value
50H/20H	06H/03H	0110H	Transmission output value HOLD when calibrating	Set value
50H/20H	06H/03H	0111H	Transmission output status when adjusting output signal	0000H: Last value HOLD 0001H: Set value HOLD 0002H: Measured value
50H/20H	06H/03H	0112H	Transmission output value HOLD when adjusting output signal	Set value
50H	06H	0126H	Transmission output adjustment mode	0000H: Turbidity/SS Display Mode 0001H: Transmission output Zero adjustment mode 0002H: Transmission output Span adjustment mode
50H/20H	06H/03H	0127H	Transmission output Zero adjustment value	Set value
50H/20H	06H/03H	0128H	Transmission output Span adjustment value	Set value
50H/20H	06H/03H	0139H	A11 High/Low limits independent lower side value	Set value
50H/20H	06H/03H	013AH	A12 High/Low limits independent lower side value	Set value
50H/20H	06H/03H	013BH	A21 High/Low limits independent lower side value	Set value
50H/20H	06H/03H	013CH	A22 High/Low limits independent lower side value	Set value
50H/20H	06H/03H	013DH	A11 High/Low limits independent upper side value	Set value
50H/20H	06H/03H	013EH	A12 High/Low limits independent upper side value	Set value
50H/20H	06H/03H	013FH	A21 High/Low limits independent upper side value	Set value
50H/20H	06H/03H	0140H	A22 High/Low limits independent upper side value	Set value

Shinko Command Type	MODBUS Function Code	Data Item		Data
50H/20H	06H/03H	0141H	A11 hysteresis	Set value
50H/20H	06H/03H	0142H	A12 hysteresis	Set value
50H/20H	06H/03H	0143H	A21 hysteresis	Set value
50H/20H	06H/03H	0144H	A22 hysteresis	Set value
50H/20H	06H/03H	0200H	User save area 1	-32768 to 32767 (8000H to 7FFFH)
50H/20H	06H/03H	0201H	User save area 2	-32768 to 32767 (8000H to 7FFFH)
50H/20H	06H/03H	0202H	User save area 3	-32768 to 32767 (8000H to 7FFFH)
50H/20H	06H/03H	0203H	User save area 4	-32768 to 32767 (8000H to 7FFFH)
50H/20H	06H/03H	0204H	User save area 5	-32768 to 32767 (8000H to 7FFFH)
50H/20H	06H/03H	0205H	User save area 6	-32768 to 32767 (8000H to 7FFFH)
50H/20H	06H/03H	0206H	User save area 7	-32768 to 32767 (8000H to 7FFFH)
50H/20H	06H/03H	0207H	User save area 8	-32768 to 32767 (8000H to 7FFFH)
50H/20H	06H/03H	0208H	User save area 9	-32768 to 32767 (8000H to 7FFFH)
50H/20H	06H/03H	0209H	User save area 10	-32768 to 32767 (8000H to 7FFFH)

11.6.3 Read Only Command

Shinko Command Type	MODBUS Function Code	Data Item		Data
20H	03H	0080H	Turbidity/SS input value	Turbidity/SS input value
20H	03H	0081H	Status flag 1 0000 0000 0000 0000 2^{15} to 2^{0} 2^{0} digit: Not used (Always 0) 2^{1} digit: Turbidity/SS input value has exceeded the value equivalent to 20.5 mA DC. 0: Normal 1: Error 2^{2} digit: Turbidity/SS input value has become lower than the value equivalent to 3.5 mA DC. 0: Normal 1: Error 2^{3} digit: Analog signal (+ white, – black) cable of the Turbidity/SS Sensor is disconnected or short-circuited. 0: Normal 1: Error 2^{4} digit: When Self-check output from the Turbidity/SS Sensor is received. 0: Normal 1: Error 2^{5} digit: Not used (Always 0) 2^{6} digit: A11 output flag 0: OFF 1: ON 2^{7} digit: A12 output flag 0: OFF 1: ON 2^{8} digit: A21 output flag 0: OFF 1: ON 2^{9} digit: A22 output flag 0: OFF 1: ON 2^{10} digit: Unit status flag 0: Turbidity/SS Display Mode 1: Setting mode 2^{11} digit: Turbidity/SS Sensor calibration status flag 0: Turbidity/SS Display Mode 1: Turbidity/SS Sensor calibration mode 2^{12}, 2^{13} digit: Zero, Span output signal adjustment status flag 2^{13} 2^{12} Status 0 0 Turbidity/SS Display Mode 0 1 Zero output signal adjustment mode 1 0 Span output signal adjustment mode 2^{14} digit: A1 output 0: OFF 1: ON 2^{15} digit: Change in key operation 0: No 1: Yes	

<table>
<tr><th>Shinko Command Type</th><th>MODBUS Function Code</th><th colspan="2">Data Item</th><th>Data</th></tr>
<tr><td>20H</td><td>03H</td><td>0091H</td><td colspan="2">Status flag 2
0000 0000 0000 0000
2^{15} to 2^{0}
2^{0} digit: During Span output signal adjustment, the Turbidity/SS input value has exceeded the value equivalent to 20.5 mA DC.
0: Normal 1: Error
2^{1} digit: During Zero output signal adjustment, the Turbidity/SS input value has become lower than the value equivalent to 3.5 mA DC.
0: Normal 1: Error
2^{2} digit: During calibration, the output signal from the Turbidity/SS sensor has not reached approx. 2 mA DC.
0: Normal 1: Error
2^{3} digit: After calibration is finished, the output signal from the Turbidity/SS Sensor has not returned to 4 mA DC.
0: Normal 1: Error
2^{4} digit: Calibration complete status flag
0: During Turbidity/SS Sensor calibration or Turbidity/SS Display Mode
1: Turbidity/SS Sensor calibration complete status
2^{5}, 2^{6} digits: Transmission output adjustment status flag
<table>
<tr><th>2^{6}</th><th>2^{5}</th><th>Status</th></tr>
<tr><td>0</td><td>0</td><td>Turbidity/SS Display Mode</td></tr>
<tr><td>0</td><td>1</td><td>During Transmission output Zero adjustment in Transmission output adjustment mode</td></tr>
<tr><td>1</td><td>0</td><td>During Transmission output Span adjustment in Transmission output adjustment mode</td></tr>
</table>
2^{7} to 2^{15} digits: Not used (Always 0)</td></tr>
</table>

11.7 Calibration and Transmission Output Adjustment via Communication Command

Turbidity/SS Sensor calibration mode, Zero output signal adjustment mode, Span output signal adjustment mode and Transmission output adjustment via software communication are described below.

11.7.1 Turbidity/SS Sensor Calibration Mode

Calibrate the Turbidity/SS Sensor following the procedure below.

Step	Operation
①	Clean the body of Turbidity/SS Sensor, particularly its lens(es).
②	Immerse the Turbidity/SS Sensor in the distilled water or ion-exchanged water.
③	Set Data item 0040H (Turbidity/SS Sensor calibration mode) to 0001H. The unit will proceed to Turbidity/SS Sensor calibration mode. (*) During the time set in [Calibration wait time], if 2^{11} digit is read at Data item 0081H (Status flag 1), 1 (Turbidity/SS Sensor calibration mode) will be returned. During the time set in [Calibration wait time], the Turbidity/SS Sensor will adjust to the ambient water temperature.
④	After the time set in [Calibration wait time] has elapsed, calibration automatically starts. During calibration, calibration signal output is turned ON for 3 seconds. If calibration signal output is turned from OFF to ON, the Turbidity/SS Sensor will output approx. 2 mA DC of analog signal.
⑤	After calibration is complete, calibration signal output is turned OFF. If 2^4 digit is read at Data item 0091H (Status flag 2), 1 (Turbidity/SS Sensor calibration complete status) will be returned. If calibration signal output is turned from ON to OFF, the Turbidity/SS Sensor will return to 4 mA DC of analog signal.
⑥	Set Data item 0040H (Turbidity/SS Sensor calibration mode) to 0000H. The unit will revert to Turbidity/SS Display Mode. If 2^{11} digit is read at Data item 0081H (Status flag 1), 0 (Turbidity/SS Display Mode) will be returned.

(*) If Calibration wait time is set to 0 (zero) minutes in [Calibration wait time], immerse the Turbidity/SS Sensor for 5 minutes to adjust to the ambient water temperature, then set Data item 0040H (Turbidity/SS Sensor calibration mode) to 0001H.
After the unit moves to Turbidity/SS Sensor calibration mode, if Data item 0041H (Calibration signal output) is set to 0001H, the Turbidity/SS Display (CH1) indicates cAL, and the Setting Display (CH2) indicates Adjh.
After that, refer to steps ④, ⑤ and ⑥.

Error codes during Turbidity/SS Sensor calibration are shown below.
To release the error code, set Data item 0040H (Turbidity/SS Sensor calibration mode) to 0000H.
The unit will revert to Turbidity/SS Display Mode.

During calibration, if output signal from the Turbidity/SS Sensor has not reached approx. 2 mA DC (*), and if 2^2 digit is read at Data item 0091H (Status flag 2), 1 (Error) will be returned. (*) Before calibration signal output is turned from ON to OFF, if output signal from the Turbidity/SS Sensor is within 1 to 3 mA DC, it is regarded as normal. If output signal is outside the range, it is regarded as an error.
After calibration is complete, if output signal from the Turbidity/SS Sensor has not returned to 4 mA DC (*), and if 2^3 digit is read at Data item 0091H (Status flag 2), 1 (Error) will be returned. (*) 5 seconds after calibration signal output is turned from ON to OFF, if the output signal from the Turbidity/SS Sensor is within 3.5 to 4.5 mA DC, it is regarded as normal. If the output signal is outside the range, it is regarded as an error.

Error codes in Turbidity/SS Display Mode are shown below.

In Turbidity/SS Display Mode, if Data item 0041H (Calibration signal output) is set to 0001H, Error code 4 (34H, Shinko protocol) or Exception code 17 (11H, MODBUS protocol) will be returned.
If 0001H (Lock 1), 0002H (Lock 2) or 0003H (Lock 3) is selected at Data item 0030H (Set value lock), and if Data items 0040H (Turbidity/SS Sensor calibration mode) and 0041H (Calibration signal output) are set to 0001H, Error code 4 (34H, Shinko protocol) or Exception code 17 (11H, MODBUS protocol) will be returned.

11.7.2 Zero and Span Output Signal Adjustment Modes

⚠ Caution

- Be sure to calibrate Turbidity/SS Sensor before adjusting Zero and Span output signals.
- Be sure to adjust Span output signal after Zero output signal is adjusted.

Adjust Zero and Span output signals following the procedure below.

Step	Operation
①	Clean the body of Turbidity/SS Sensor, particularly its lens(es).
②	Immerse the Turbidity/SS Sensor in the distilled water or ion-exchanged water.
③	Set Data item 0042H (Output signal adjustment mode) to 0001H. The unit will proceed to Zero output signal adjustment mode. During Zero output signal adjustment, if 2^{13}, 2^{12} digits are read at Data item 0081H (Status flag 1), 01 (Zero Output Signal Adjustment mode) will be returned.
④	After the Turbidity/SS Sensor has adjusted to the ambient water temperature for approx. 5 minutes, check the Turbidity/SS input value at Data item 0080H (Turbidity/SS input value).
⑤	If the Turbidity/SS input value is not 0 (zero), set the Zero output signal adjustment value at Data item 0043H (Zero output signal adjustment value). Setting range of Zero output signal adjustment value: ±5% of measurement span
⑥	Check the Turbidity/SS input value at Data item 0080H (Turbidity/SS input value) again. If the Turbidity/SS input value is not 0 (zero), return to Step ⑤. If the Turbidity/SS input value is 0 (zero), Zero output signal adjustment is completed.
⑦	In Zero output signal adjustment mode, set Data item 0042H (Output signal adjustment mode) to 0002H. The unit will proceed to Span output signal adjustment mode. During Span output signal adjustment, if 2^{13}, 2^{12} digits are read at Data item 0081H (Status flag 1), 10 (Span output signal adjustment mode) will be returned.
⑧	Block the light beam between the lenses of the sensor for more than 30 seconds. [**Be careful not to touch the lens(es).**] Check the Turbidity/SS input value at Data item 0080H (Turbidity/SS input value).
⑨	If the Turbidity/SS input value is not the Measurement range high limit value, set the Span output signal adjustment value at Data item 0044H (Span output signal adjustment value). Setting range of Span output signal adjustment value: ±5% of measurement span
⑩	Check the Turbidity/SS input value at Data item 0080H (Turbidity/SS input value) again. If the Turbidity/SS input value is not the Measurement range high limit value, return to Step ⑨. If the Turbidity/SS input value is the Measurement range high limit value, Span output signal adjustment is completed.
⑪	Set Data item 0042H (Output signal adjustment mode) to 0000H. The unit will return to Turbidity/SS Display Mode. If 2^{13}, 2^{12} digits are read at Data item 0081H (Status flag 1), 00 (Turbidity/SS Display Mode) will be returned.

Error codes during Zero and Span output signal adjustments are shown below.

During Zero output signal adjustment, when Turbidity/SS input value has become lower than the value equivalent to 3.5 mA DC, and if 2^1 digit is read at Data item 0091H (Status flag 2), Error code 1 (Error) will be returned. To release the error code, set Data item 0042H (Output signal adjustment mode) to 0000H or 0002H. The unit will return to Turbidity/SS Display Mode.
During Span output signal adjustment, when Turbidity/SS input value has exceeded the value equivalent to 20.5 mA DC, and if 2^0 digit is read at Data item 0091H (Status flag 2), Error code 1 (Error) will be returned. To release the error code, set Data item 0042H (Output signal adjustment mode) to 0000H. The unit will return to Turbidity/SS Display Mode.

Error codes in Turbidity/SS Display Mode are shown below.

In Turbidity/SS Display Mode, if Zero or Span output signal adjustment value is set at Data items 0043H (Zero output signal adjustment value) or 0044H (Span output signal adjustment value), Error code 4 (34H, Shinko protocol) or Exception code 17 (11H, MODBUS protocol) will be returned.
If 0001H (Lock 1), 0002H (Lock 2) or 0003H (Lock 3) is selected at Data item 0030H (Set value lock), and if Zero or Span output signal adjustment value is set at Data items 0043H (Zero output signal adjustment value) or 0044H (Span output signal adjustment value), Error code 4 (34H, Shinko protocol) or Exception code 17 (11H, MODBUS protocol) will be returned.

11.7.3 Transmission Output Adjustment Mode

Fine adjustment of Transmission output is performed.
WIL-101-TU is adjusted at the factory, however, differences may occur between the indication value of the connected equipment (recorders, etc.) and the output value of this unit.
In this case, perform Transmission output Zero adjustment and Span adjustment.

The following outlines the procedure for Transmission output adjustment.

(1) Set Data item 0126H (Transmission output adjustment mode) to 0001H.
The unit moves to Transmission output Zero adjustment mode.
If 2^6, 2^5 digits are read at Data item 0091H (Status flag 2), 01 (During Transmission output Zero adjustment in Transmission output adjustment mode) will be returned.

(2) Set Transmission output Zero adjustment value at Data item 0127H (Transmission output Zero adjustment value), while viewing the value indicated on the connected equipment (recorders, etc.).
Setting range: ±5.00% of Transmission output span

(3) Set Data item 0126H (Transmission output adjustment mode) to 0002H.
The unit moves to Transmission output Span adjustment mode.
If 2^6, 2^5 digits are read at Data item 0091H (Status flag 2), 10 (During Transmission output Span adjustment in Transmission output adjustment mode) will be returned.

(4) Set Transmission output Span adjustment value at Data item 0128H (Transmission output Span adjustment value), while viewing the value indicated on the connected equipment (recorders, etc.).
Setting range: ±5.00% of Transmission output span

(5) Repeat steps (1) to (4) if necessary.

(6) Set Data item 0126H (Transmission output adjustment mode) to 0000H.
The unit reverts to Turbidity/SS Display Mode.

11.8 Notes on Programming Monitoring Software

11.8.1 How to Speed up the Scan Time

When monitoring multiple units of the WIL-101-TU, set the program so that the requisite minimum pieces of data such as Data item 0080H (Turbidity/SS input value), Data item 0081H (Status flag 1), Data item 0091H (Status flag 2) can be read. For other data, set the program so that they can be read only when their set value has been changed. This will speed up the scan time.

11.8.2 How to Read the Set Value Changes Made by Front Keypad Operation

If any set value is changed by keypad operation, the instrument sets [0081H (Status flag 1) 2^{15}: Change in key operation] to 1 (Yes).

There are 2 methods of reading the set value changes made by the front keypad:

(1) Reading Method 1

① On the monitoring software side, check that [0081H (Status flag 1) 2^{15}: Change in key operation] has been set to 1 (Yes), then read all set values.

② Clear [0081H (Status flag 1) 2^{15}: Change in key operation], by setting Data item 007FH (Key operation change flag clearing) to 0001H (Clear change flag).
If 007FH (Key operation change flag clearing) is set to 0001H (Clear change flag) during setting mode of the instrument, Error code 5 (35H, Shinko protocol) or Exception Code 18 (12H, MODBUS protocol) will be returned as a negative acknowledgement. And [0081H (Status flag 1) 2^{15}: Change in key operation] cannot be cleared.
Set the program so that all set values can be read when a negative acknowledgement is returned.

③ Read all set values again after acknowledgement is returned.

(2) Reading Method 2

① On the monitoring software side, check that [0081H (Status flag 1) 2^{15}: Change in key operation] has been set to 1 (Yes), then set Data item 007FH (Key operation change flag clearing) to 0001H (Clear change flag).

② Set the program depending on the acknowledgement or negative acknowledgement as follows.

When acknowledgement is returned:
Consider it as settings completed, and read all set values.

When Error code 5 (35H, Shinko protocol) or Exception code 18 (12H, MODBUS protocol) is returned as a negative acknowledgement:
Consider it as still in setting mode, and read the requisite minimum pieces of data such as 0080H (Turbidity/SS input value), 0081H (Status flag 1), 0091H (Status flag 2), then return to step ①.

Thus, programs which do not affect the scan time can be created using the methods described above, even if set values on the monitoring software will not be updated until settings are complete.

11.8.3 Note when Sending All Set Values at One Time

- When A11, A12, A21 or A22 type is changed at Data item 0005H (A11 type), 0050H (A12 type), 0051H (A21 type) or 0052H (A22 type), the A11, A12, A21 or A22 value will default to 0 (zero).
  The A11, A12, A21 or A22 output status will also be initialized.

  First, send the A11, A12, A21, A22 type, then send the A11, A12, A21, A22 value at Data item 0006H (A11 value), 0053H (A12 value), 0054H (A21 value) and 0055H (A22 value).

12. Specifications

12.1 Standard Specifications

Rating

Rated scale

Input	Measurement Range	Resolution
Turbidity (*1)	0.0 to 100.0 (Formazin)	0.1 (Formazin)
	0 to 500 (Formazin)	1 (Formazin)
	0 to 3000 (Formazin)	
SS	0 to 1000 mg/L (Kaolin)	1 mg/L (Kaolin)
	0 to 50000 mg/L (Kaolin) (*2)	10 mg/L (Kaolin)

(*1) Changeable from Formazin to Kaolin in [Measurement unit].

(*2) The ones digit of the current Turbidity/SS input value is rounded off, and is divided by 10. This value is indicated as an input value.

Input

Name	Manufacturer	Model
Turbidity Sensor	OPTEX Co., Ltd.	TC-100, TC-500, TC-3000
SS Sensor	OPTEX Co., Ltd.	TCS-1000(E), TS-MxS-A

Power supply voltage

Model	WIL-101-TU	WIL-101-TU 1
Power supply voltage	100 to 240 V AC 50/60 Hz	24 V AC/DC 50/60 Hz
Allowable voltage fluctuation range	85 to 264 V AC	20 to 28 V AC/DC

General Structure

External dimensions	30 x 88 x 108 mm (W x H x D, including socket)
Mounting	DIN rail
Case	Material: Flame-resistant resin, Color: Light gray
Panel	Membrane sheet
Indication structure	Display

Turbidity/SS Display (CH1)	Red LED 4-digits, character size 10 x 4.6 mm (H x W)
Setting Display (CH2)	Red LED 4-digits, character size 10 x 4.6 mm (H x W)

Action indicators

PWR (Yellow)	Instrument power ON: Lit
A1 (Red)	A1 output (Contact output 1) ON: Lit
T/R (Yellow)	Serial communication TX output (transmitting): Lit

Setting structure	Setting method: Input system using membrane sheet key

Indication Performance

Repeatability	±0.2% of measurement span ±1 digit (excluding sensor accuracy)
Linearity	±0.2% of measurement span ±1 digit (excluding sensor accuracy)
Input sampling period	500 ms
Time accuracy	Within ±1% of setting time

Standard Functions

Turbidity/SS Sensor calibration	Immerse the Turbidity/SS Sensor in the distilled water or ion-exchanged water, then calibration is automatically performed after the time set in [Calibration wait time] has elapsed.
Zero output signal adjustment	Immerse the Turbidity/SS Sensor in the distilled water or ion-exchanged water. Approximately 5 minutes after the Turbidity/SS Sensor has adjusted to the ambient water temperature, adjust the Turbidity/SS input value by setting Zero output signal adjustment value so that the Turbidity/SS input value becomes 0 (zero).
Span output signal adjustment	Block the light beam between the lenses of the sensor for more than 30 seconds. Adjust the Turbidity/SS input value by setting Span output signal adjustment value so that the Turbidity/SS input value becomes measurement range high limit value.
Turbidity/SS inputs for moving average	Sets the number of Turbidity/SS inputs used to obtain moving average. An average value will be obtained every time sampling occurs.(Fig. 12.1-1) This function is disabled in Turbidity/SS Sensor calibration mode, Zero output signal adjustment mode and Span output signal adjustment mode.

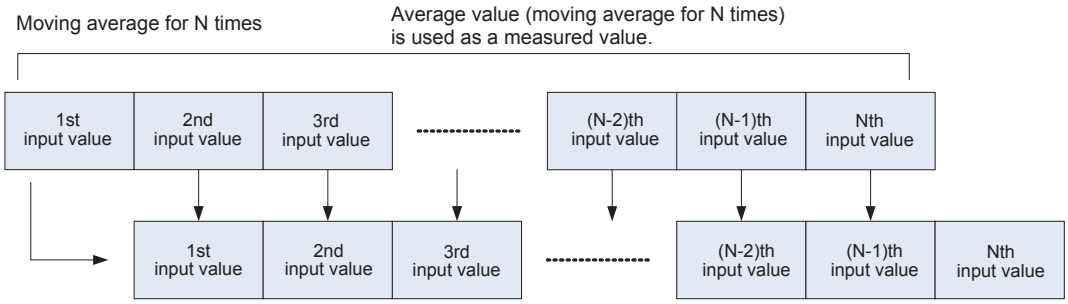

For the next sampling, the 1st input value from the last previous sampling is discarded, and a new input value is added, from which an average value is calculated. This is used as a measured value.

(Fig 12.1-1)

Serial communication	The following operations can be carried out from an external computer. (1) Reading and setting of various set values (2) Reading of the Turbidity/SS input value and status (3) Function change, adjustment (4) Reading and setting of user save area	
Cable length	1.2 km (Max.), Cable resistance: Within 50 Ω (Terminators are not necessary, but if used, use 120 Ω minimum on both sides.)	
Communication line	EIA RS-485	
Communication method	Half-duplex communication	
Communication speed	9600, 19200, 38400 bps (Selectable by keypad.)	
Synchronization method	Start-stop synchronization	
Code form	ASCII, Binary	
Communication protocol	Shinko protocol, MODBUS ASCII, MODBUS RTU (Selectable by keypad.)	
Data Bit/Parity	8 bits/No parity, 7 bits/No parity, 8 bits/Even, 7 bits/Even, 8 bits/Odd, 7 bits/Odd (Selectable by keypad.)	
Stop Bit	1, 2 (Selectable by keypad)	
Error Correction	Command request repeat system	
Error Detection	Parity check, Checksum (Shinko protocol), LRC (MODBUS protocol ASCII), CRC-16 (MODBUS protocol RTU)	

Data format	Communication Protocol	**Shinko Protocol**	**MODBUS ASCII**	**MODBUS RTU**
	Start bit	1	1	1
	Data bit	7	7 (8) Selectable	8
	Parity	Even	Even (No parity, Odd) Selectable	No parity (Even, Odd) Selectable
	Stop bit	1	1 (2) Selectable	1 (2) Selectable

Insulation / Dielectric Strength

Circuit insulation configuration	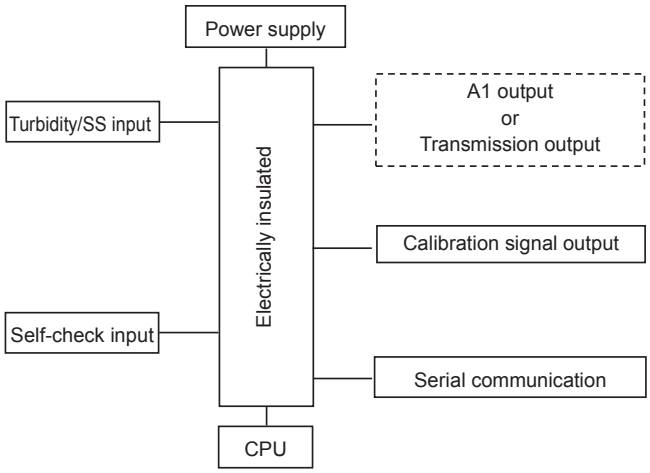 : When the corresponding option is ordered. Insulation resistance: 10 MΩ minimum, at 500 V DC
Dielectric strength	Between power terminal - ground (GND): 1.5 kV AC for 1 minute Between input terminal - ground (GND): 1.5 kV AC for 1 minute Between input terminal - power terminal: 1.5 kV AC for 1 minute

Attached Functions

Set value lock	Loc 1 (Lock 1): None of the set values can be changed. Loc2 (Lock 2): Only A11, A12, A21, A22 values can be changed. Loc3 (Lock 3): All set values – except Measurement range, Measurement unit, Span setting, Zero and Span output signal adjustments, Turbidity/SS Sensor calibration, Transmission output Zero and Span adjustments – can be temporarily changed. However, they revert to their previous value after the power is turned off because they are not saved in the non-volatile IC memory.
Turbidity/SS input sensor correction	This corrects the input value from the Turbidity/SS Sensor. When a sensor cannot be set at the exact location where measurement is desired, turbidity/SS input value measured by the sensor may deviate from the value in the measured location. In this case, desired Turbidity/SS input value can be obtained by adding a sensor correction value. However, it is only effective within the measurement range regardless of the sensor correction value. Setting range: ±10% of measurement span
Outside measurement range	When Turbidity/SS input value is outside the measurement range, the following will be indicated.

Turbidity/SS Display (CH1)	Setting Display (CH2)
When Turbidity/SS input value has exceeded the value equivalent to 20.5 mA DC, the value equivalent to 20.5 mA DC flashes.	E-13 flashes.
When Turbidity/SS input value has become lower than the value equivalent to 3.5 mA DC, the value equivalent to 3.5 mA DC flashes.	E-14 flashes.

Power failure countermeasure	The setting data is backed up in the non-volatile IC memory.
Self-diagnosis	The CPU is monitored by a watchdog timer, and if an abnormal status occurs, the WIL-101-TU is switched to warm-up status.

Warm-up indication	For approx. 4 seconds after the power is switched ON, an input type is indicated on the Turbidity/SS Display (CH1). During this time, all outputs are in OFF status, and LED indicators – except the Setting Display (CH2) and PWR indicator – turn off.	
	Measurement Range	**Turbidity/SS Display (CH1)**
	0.0 to 100.0 (Formazin)	TU□1
	0 to 500 (Formazin)	TU□5
	0 to 3000 (Formazin)	TU30
	0 to 1000 mg/L (Kaolin)	TU41
	0 to 50000 mg/L (Kaolin)	TU45
Display sleep function	If any item other than 'No indication' is selected in [Display selection (p.30)], and if indication time is set, the display (no operation status) becomes unlit after the indication time has passed. By pressing any key, the display re-lights. If the indication time is set to 0 (zero), the display remains lit, and this function does not work.	
Auto-light function	Automatically measures and controls brightness of the Turbidity/SS Display (CH1), Setting Display (CH2) and action indicators.	

Other

Power consumption	Approx. 7 VA
Ambient temperature	0 to 50℃
Ambient humidity	35 to 85 %RH (non-condensing)
Weight	Approx. 200 g (including socket)
Accessories included	Instruction manual: 1 copy Unit label: 1 sheet Inspection report: 1 sheet
Accessories sold separately	Socket: ASK-001-1 (Finger-safe, Ring terminals unusable) Power Supply (Recommended): 12 V DC: S8VS-01512 (Made by OMRON Corporation.) 24 V DC: S8VS-01524 ((Made by OMRON Corporation.)

12.2 Optional Specifications

A□□ Output (Option Code: EVT)

A□□ output	If Turbidity/SS input value exceeds the A□□ value, the A□□ output will be turned ON for each A□□ output type. Regardless of options being ordered, A□□ output status can be read via Status flag 1 (A11, A12, A21, A22 output flag bit) in Serial communication. A□□ output status, when input errors occur, differs depending on the selections in [A□□ output when input errors occur (p.19)] as follows: • If oFF (Disabled) is selected, the A□□ output and A□□ output status will be turned OFF if input errors occur. • If on (Enabled) is selected, the A□□ output and A□□ output status will be maintained if input errors occur.

Setting range	Measurement range low limit to Measurement range high limit (*1)(*2)
Action	ON/OFF action
A□□ ON side, A□□ OFF side	10% of measurement span (*1)(*3)
A□□ High/Low limits independent upper side value, A□□ High/Low limits independent lower side value	Measurement range low limit to Measurement range high limit (*1)(*2) Disabled when set to 0 or 0.0.
A□□ hysteresis	0.1 to 10% of measurement span (*1)(*3)
A□□ type	One type can be selected from the following with the keypad. • No action • Turbidity/SS input low limit action • Turbidity/SS input high limit action • Error output • Fail output • Turbidity/SS input High/Low limits independent action
Output	Relay contact, 1a Control capacity: 3 A 250 V AC (Resistive load) 1 A 250 V AC (Inductive load cosϕ=0.4) Electrical life: 100,000 cycles
A□□ ON delay time	0 to 9999 seconds
A□□ OFF delay time	0 to 9999 seconds
A1 output allocation	For A1 output, A11 type, A12 type, A21 type and/or A22 type are allocated. Output is OR output.
Output ON time/ OFF time when A1 output ON	If Output ON time and OFF time are set, A1 output can be turned ON/OFF in a configured cycle when A1 output is ON.

(*1) The measurement unit and decimal point place follow the measurement range.
(*2) If kAon [Kaolin (mg/L)] is selected in [Measurement unit], the Measurement range high limit value will become the value set in [Span setting].
(*3) If kAon [Kaolin (mg/L)] is selected in [Measurement unit], the Measurement span will become the value set in [Span setting].

Transmission Output (Option Code: TA)

<table>
<tr><td>Transmission output</td><td>Converting Turbidity/SS input value to analog signal every input sampling period, and outputs the value in current.
If Transmission output high limit and low limit are set to the same value, Transmission output will be fixed at 4 mA DC.
<table>
<tr><td>Resolution</td><td>12000</td></tr>
<tr><td>Current</td><td>4 to 20 mA DC (Load resistance: Max. 550 Ω)</td></tr>
<tr><td>Output accuracy</td><td>Within ±0.3% of Transmission output span</td></tr>
</table></td></tr>
</table>

13. Troubleshooting

If any malfunction occurs, refer to the following items after checking that power is being supplied to the WIL-101-TU.

13.1 Error Codes

(Table13.1-1)

Error Code	Error Type	Error Contents	Occur-rence
E-11	Fail	When Self-check output from the Turbidity/SS Sensor is received.	When measuring
E-12	Fail	Analog signal (+ white, – black) cable of the Turbidity/SS Sensor is disconnected or short-circuited.	
E-13	Error	Turbidity/SS input value has exceeded the value equivalent to 20.5 mA DC.	
E-14	Error	Turbidity/SS input value has become lower than the value equivalent to 3.5 mA DC.	
E-21	Fail	During calibration, the output signal from the Turbidity/SS Sensor does not reach approx. 2 mA DC. (Before calibration signal output is turned from ON to OFF, if the output signal from the Turbidity/SS Sensor is within 1 to 3 mA DC, it is regarded as normal. If the output signal is outside this range, it is regarded as an error.)	When calibrating
E-22	Fail	After calibration is complete, the output signal from the Turbidity/SS Sensor does not return to 4 mA DC. (Approximately 5 seconds after calibration signal output is turned from ON to OFF, if the output signal from the Turbidity/SS Sensor is within 3.5 to 4.5 mA DC, it is regarded as normal. If the output signal is outside this range, it is regarded as an error.)	
E-23	Error	During Span output signal adjustment, the Turbidity/SS input value has exceeded the value equivalent to 20.5 mA DC.	When adjusting
E-24	Error	During Zero output signal adjustment, the Turbidity/SS input value has become lower than the value equivalent to 3.5 mA DC.	

13.2 Solutions to Problems

If any malfunction occurs, refer to the following items after checking that power is being supplied to the WIL-101-TU.

13.2.1 Indication

Problem	Possible Cause	Solution
The Turbidity/SS Display (CH1) is unlit.	The time set in [Indication time (p.30)] has elapsed.	If any key is pressed while the display is unlit, it will re-light. Set the indication time to a suitable time-frame.
The Turbidity/SS Display (CH1) is dark.	USE (Enabled) is selected in [Auto-light function (p.29)].	Select ---- (Disabled).
The Setting Display (CH2) is unlit.	dPU or nonE is selected in [Display selection (p.30)].	Make a selection except dPU and nonE.
The Setting Display (CH2) flashes [E-11].	The Turbidity/SS Sensor is malfunctioning.	It is necessary to repair the Turbidity/SS Sensor. Contact our agency or us.
	Incorrect wiring of the Turbidity/SS Sensor cable	Wire it correctly.

Problem	Possible Cause	Solution
The Setting Display (CH2) flashes [E- 12].	Analog signal (+ white, – black) cable of the Turbidity/SS Sensor is disconnected or short-circuited.	Check the Turbidity/SS Sensor cable.
The Setting Display (CH2) flashes [E- 13].	The Turbidity/SS Sensor is malfunctioning.	It is necessary to repair the Turbidity/SS Sensor. Contact our agency or us.
	Incorrect wiring of the Turbidity/SS Sensor cable	Wire it correctly.
The Setting Display (CH2) flashes [E- 14].	The Turbidity/SS Sensor is malfunctioning.	It is necessary to repair the Turbidity/SS Sensor. Contact our agency or us.
	Incorrect wiring of the Turbidity/SS Sensor cable	Wire it correctly.
The Setting Display (CH2) flashes [E-2 1].	The Turbidity/SS Sensor is malfunctioning.	It is necessary to repair the Turbidity/SS Sensor. Contact our agency or us.
	Incorrect wiring of the Turbidity/SS Sensor cable	Wire it correctly.
The Setting Display (CH2) flashes [E-22].	The Turbidity/SS Sensor is malfunctioning.	It is necessary to repair the Turbidity/SS Sensor. Contact our agency or us.
	Incorrect wiring of the Turbidity/SS Sensor cable	Wire it correctly.
The Turbidity/SS Display (CH1) indicates [E-23] and Turbidity/SS input value alternately.	The light beam between the lenses has not been completely blocked.	Make sure the light beam is completely blocked for more than 30 seconds, then adjust Span output signal again.
	The Turbidity/SS Sensor is malfunctioning.	It is necessary to repair the Turbidity/SS Sensor. Contact our agency or us.
	Incorrect wiring of the Turbidity/SS Sensor cable	Wire it correctly.
The Turbidity/SS Display (CH1) indicates [E-24] and Turbidity/SS input value alternately.	The lens(es) of the Turbidity/SS Sensor is not clean.	Clean the lens(es) of Turbidity/SS Sensor, then adjust Zero output signal again.
	The Turbidity/SS Sensor is malfunctioning.	It is necessary to repair the Turbidity/SS Sensor. Contact our agency or us.
	Incorrect wiring of the Turbidity/SS Sensor cable	Wire it correctly.
The Turbidity/SS Display (CH1) indicates [Err 1].	Internal memory is defective.	Contact our agency or us.

13.2.2 Key Operation

Problem	Possible Cause	Solution
• None of the values can be changed. • The values do not change by △, ▽ keys.	"Loc 1 (Lock 1)" is selected in [Set value lock (p.28)].	Select ---- (Unlock).
• Only A□□ value can be set. Other settings are impossible. • The values do not change by △, ▽ keys.	"Loc2 (Lock 2)" is selected in [Set value lock (p.28)].	Select ---- (Unlock).
Unable to enter Turbidity/SS Sensor calibration mode, Zero output signal adjustment mode or Span output signal adjustment mode.	Loc 1 (Lock 1), Loc2 (Lock 2) or Loc3 (Lock 3) is selected in [Set value lock (p.28)].	Select ---- (Unlock).

13.2.3 Communication

Check that power is being supplied to the master and slave that customers use.
If communication failure still occurs, check the following.

Problem	Possible Cause	Solution
Communication failure	Communication cable is not securely connected, or is disconnected/defective.	Check the communication cable and the connector.
	Incorrect wiring of the communication cable and/or connector	Check the communication cable and the connector.
	Imperfect contact between the communication cable and the connector, or between the communication connector and instrument port	Check the communication cable and the connector.
	Communication speed of the slave does not match that of the master.	Set the same communication speed on the master and the slave.
	The data bit, parity and stop bit of the master do not correspond to those of the slave.	Set the same data bit, parity and stop bit on the master and the slave.
	The instrument number (address) of the slave does not correspond to that of the command.	Check the instrument number (address) of the slave and the command.
	The instrument numbers (addresses) are duplicated in multiple slaves.	Check that each slave has a different instrument number (address).
	Make sure that the program is appropriate for the transmission timing.	Check the program.
Although communication is occurring, the response is negative acknowledgement.	A non-existent command code has been sent.	Check the command code.
	The setting command data exceeds the setting range of the slave.	Check the setting range of the slave.
	The instrument cannot be set during Turbidity/SS Sensor calibration mode, Zero output signal adjustment mode or Span output signal adjustment mode.	Check the slave status.
	The WIL-101-TU is in the front keypad operation setting mode.	Return the unit to Turbidity/SS Display Mode.

For all other malfunctions, please contact our main office or dealers.

14. Character Tables

The following shows our character tables. Use data column for your reference.

Setting Groups

Character	Setting Group
Fnc.1	Turbidity/SS Input Function Group
Fnc.2	Output Function Group
oPEr	Basic Function Group

Turbidity/SS Sensor Calibration Mode

Character	Setting Item, Setting Range	Factory Default	Data
SPby AdJS(*)	**Turbidity/SS Sensor Calibration Mode** After the time set in [Calibration wait time] has elapsed, calibration automatically starts. During calibration, calibration signal output is turned ON for 3 seconds, indicating cAL□ on the Turbidity/SS Display (CH1) and AdJS on the Setting Display (CH2). After Calibration is complete, the calibration signal output is turned OFF, indicating cAL□ on the Turbidity/SS Display (CH1), and Good on the Setting Display (CH2).		

(*) AdJS and Calibration wait time are alternately displayed.

Zero Output Signal Adjustment Mode

Character	Setting Item, Setting Range	Factory Default	Data
[Input value] ZEro(*1)	**Zero output signal adjustment value** Setting range: ±5% of measurement span (*2)	0.0	

(*1) ZEro and Zero output signal adjustment value are alternately displayed.
(*2) The measurement unit and decimal point place follow the measurement range.

Span Output Signal Adjustment Mode

Character	Setting Item, Setting Range	Factory Default	Data
[Input value] SPAn(*1)	**Span output signal adjustment value** Setting range: ±5% of measurement span (*2)	0.0	

(*1) SPAn and Span output signal adjustment value are alternately displayed.
(*2) The measurement unit and decimal point place follow the measurement range.

Transmission Output Adjustment Mode

Character	Setting Item, Setting Range	Factory Default	Data
AJZ□ □0.00	**Transmission output Zero adjustment value** Setting range: ±5.00% of Transmission output span	0.00%	
AJS□ □0.00	**Transmission output Span adjustment value** Setting range: ±5.00% of Transmission output span	0.00%	

Turbidity/SS input Function Group

Character	Setting Item, Setting Range	Factory Default	Data
rnG 100.0	**Measurement range**	0.0 to 100.0 (Formazin)	

Selection	Measurement Range	Model
100.0	0.0 to 100.0 (Formazin)	Turbidity Sensor TC-100
□500	0 to 500 (Formazin)	Turbidity Sensor TC-500
3000	0 to 3000 (Formazin)	Turbidity Sensor TC-3000
1000	0 to 1000 mg/L (Kaolin)	SS Sensor TCS-1000(E)
5000	0 to 50000 mg/L (Kaolin) (*)	SS Sensor TS-MxS-A

dFcF □□20	**Turbidity/SS inputs for moving average** Setting range: 1 to 120	20	
1 Err oFF□	**A□□ output when input errors occur** on□□ : Enabled oFF□ : Disabled	Disabled	
FILT □□0.0	**Turbidity/SS input filter time constant** Setting range: 0.0 to 10.0 seconds	0.0 seconds	
rUho □□0.0	**Turbidity/SS input sensor correction** Setting range: ±10% of measurement span (*2)	0.0	
cALT □□□ 1	**Calibration wait time** Setting range: 0 to 10 minutes	1 minute	
UnIT Form	**Measurement unit** Form : Formazin tRon : Kaolin (mg/L)	Formazin	
SPAn 100.0	**Span setting** Setting range: See (Table 14-1).	100.0 (Formazin)	

(*1) The measurement range of the SS Sensor TS-MxS-A is 0 to 50000 mg/L (Kaolin).
As the Turbidity/SS Display (CH1) has 4 digits, the value 10000 mg/L or higher cannot be indicated.
Therefore, the ones digit of current Turbidity/SS input value is rounded off, divided by 10, and then indicated.
(e.g.) 25004 mg/L (Kaolin): Indicated as 2500.
25005 mg/L (Kaolin): Indicated as 2501.

(*2) The measurement unit and decimal point place follow the measurement range.
If tRon [Kaolin (mg/L)] is selected in [Measurement unit], the Measurement span will become the value set in [Span setting].

(Table 14-1)

Measurement Range	Measurement Unit	Setting Range	Factory Default
0.0 to 100.0 (Formazin)	Kaolin (mg/L)	0.0 to 900.0 (Formazin)	100.0 (Formazin)
0 to 500 (Formazin)		0 to 9000 (Formazin)	500 (Formazin)
0 to 3000 (Formazin)		0 to 9000 (Formazin)	3000 (Formazin)
Measurement ranges and units except the above.		0.0 to 900.0 (Formazin) This setting item is not indicated.	100.0 (Formazin)

Output Function Group

Character	Setting Item, Setting Range	Factory Default	Data
A11F ----	**A11 type** ---- : No action TU_L : Turbidity/SS input low limit action TU_H : Turbidity/SS input high limit action Error : Error output FAIL : Fail output TUHL : Turbidity/SS input High/Low limits independent action	No action	
A12F ----	**A12 type** Selection item: Same as those of A11 type	No action	
A21F ----	**A21 type** Selection item: Same as those of A11 type	No action	
A22F ----	**A22 type** Selection item: Same as those of A11 type	No action	
A11 0.0	**A11 value** Setting range: Measurement range low limit to Measurement range high limit (*1)(*2)	0.0 (Formazin)	
A12 0.0	**A12 value** Setting range: Measurement range low limit to Measurement range high limit (*1)(*2)	0.0 (Formazin)	
A21 0.0	**A21 value** Setting range: Measurement range low limit to Measurement range high limit (*1)(*2)	0.0 (Formazin)	
A22 0.0	**A22 value** Setting range: Measurement range low limit to Measurement range high limit (*1)(*2)	0.0 (Formazin)	
A11d hdlF	**A11 hysteresis type** cdlF: Medium Value hdlF: Reference Value	Reference Value	
A11U 10	**A11 ON side** Setting range: 10% of measurement span (*1)(*3)	1.0 (Formazin)	
A11L 10	**A11 OFF side** Setting range: 10% of measurement span (*1)(*3)	1.0 (Formazin)	
A12d hdlF	**A12 hysteresis type** cdlF: Medium Value hdlF: Reference Value	Reference Value	
A12U 10	**A12 ON side** Setting range: 10% of measurement span (*1)(*3)	1.0 (Formazin)	
A12L 10	**A12 OFF side** Setting range: 10% of measurement span (*1)(*3)	1.0 (Formazin)	
A21d hdlF	**A21 hysteresis type** cdlF: Medium Value hdlF: Reference Value	Reference Value	
A21U 10	**A21 ON side** Setting range: 10% of measurement span (*1)(*3)	1.0 (Formazin)	
A21L 10	**A21 OFF side** Setting range: 10% of measurement span (*1)(*3)	1.0 (Formazin)	
A22d hdlF	**A22 hysteresis type** cdlF: Medium Value hdlF: Reference Value	Reference Value	

(*1) The measurement unit and decimal point place follow the measurement range.
(*2) If tAon [Kaolin (mg/L)] is selected in [Measurement unit], the Measurement range high limit value will become the value set in [Span setting].
(*3) If tAon [Kaolin (mg/L)] is selected in [Measurement unit], the Measurement span will become the value set in [Span setting].

Character	Setting Item, Setting Range	Factory Default	Data
A22U 10	**A22 ON side** Setting range: 10% of measurement span (*1)(*3)	1.0 (Formazin)	
A22L 10	**A22 OFF side** Setting range: 10% of measurement span (*1)(*3)	1.0 (Formazin)	
A11o 0	**A11 ON delay time** Setting range: 0 to 9999 seconds	0 seconds	
A12o 0	**A12 ON delay time** Setting range: 0 to 9999 seconds	0 seconds	
A21o 0	**A21 ON delay time** Setting range: 0 to 9999 seconds	0 seconds	
A22o 0	**A22 ON delay time** Setting range: 0 to 9999 seconds	0 seconds	
A11c 0	**A11 OFF delay time** Setting range: 0 to 9999 seconds	0 seconds	
A12c 0	**A12 OFF delay time** Setting range: 0 to 9999 seconds	0 seconds	
A21c 0	**A21 OFF delay time** Setting range: 0 to 9999 seconds	0 seconds	
A22c 0	**A22 OFF delay time** Setting range: 0 to 9999 seconds	0 seconds	
A11n 0.0	**A11 High/Low limits independent lower side value** Setting range: Measurement range low limit to high limit (*1)(*2)	0.0 (Formazin)	
A12n 0.0	**A12 High/Low limits independent lower side value** Setting range: Measurement range low limit to high limit (*1)(*2)	0.0 (Formazin)	
A21n 0.0	**A21 High/Low limits independent lower side value** Setting range: Measurement range low limit to high limit (*1)(*2)	0.0 (Formazin)	
A22n 0.0	**A22 High/Low limits independent lower side value** Setting range: Measurement range low limit to high limit (*1)(*2)	0.0 (Formazin)	
A11P 0.0	**A11 High/Low limits independent upper side value** Setting range: Measurement range low limit to high limit (*1)(*2)	0.0 (Formazin)	
A12P 0.0	**A12 High/Low limits independent upper side value** Setting range: Measurement range low limit to high limit (*1)(*2)	0.0 (Formazin)	
A21P 0.0	**A21 High/Low limits independent upper side value** Setting range: Measurement range low limit to high limit (*1)(*2)	0.0 (Formazin)	
A22P 0.0	**A22 High/Low limits independent upper side value** Setting range: Measurement range low limit to high limit (*1)(*2)	0.0 (Formazin)	
A11H 10	**A11 hysteresis** Setting range: 0.1 to 10% of measurement span (*1)(*3)	1.0 (Formazin)	
A12H 10	**A12 hysteresis** Setting range: 0.1 to 10% of measurement span (*1)(*3)	1.0 (Formazin)	
A21H 10	**A21 hysteresis** Setting range: 0.1 to 10% of measurement span (*1)(*3)	1.0 (Formazin)	
A22H 10	**A22 hysteresis** Setting range: 0.1 to 10% of measurement span (*1)(*3)	1.0 (Formazin)	

(*1) The measurement unit and decimal point place follow the measurement range.

(*2) If tAon [Kaolin (mg/L)] is selected in [Measurement unit], the Measurement range high limit value will become the value set in [Span setting].

(*3) If tAon [Kaolin (mg/L)] is selected in [Measurement unit], the Measurement span will become the value set in [Span setting].

Basic Function Group

Character	Setting Item, Setting Range	Factory Default	Data
Lock ----	**Set value lock** ---- : Unlock Loc 1 : Lock 1 Loc2 : Lock 2 Loc3 : Lock 3	Unlock	
cnhL nonL	**Communication protocol** nonL : Shinko protocol nodA : MODBUS ASCII mode nodr : MODBUS RTU mode	Shinko protocol	
cnno 0	**Instrument number** Setting range: 0 to 95	0	
cnhP 96	**Communication speed** 96 : 9600 bps 192 : 19200 bps 384 : 38400 bps	9600 bps	
cnFr 7Eon	**Data bit/Parity** 8non : 8 bits/No parity 7non : 7 bits/No parity 8Eon : 8 bits/Even 7Eon : 7 bits/Even 8odd : 8 bits/Odd 7odd : 7 bits/Odd	7 bit/Even	
cnhr 1	**Stop bit** 1 : 1 bit 2 : 2 bits	1 bit	
trLH 100.0	**Transmission output high limit** Setting range: Transmission output low limit to Measurement range high limit (*1)(*2)	100.0 (Formazin)	
trLL 0.0	**Transmission output low limit** Setting range: Measurement range low limit to Transmission output high limit (*1)	0.0 (Formazin)	
trch bEFH	**Transmission output status when calibrating** bEFH: Last value HOLD (Retains the last value before calibration, and outputs it.) hEtH: Set value HOLD (Outputs the value set in [Transmission output value HOLD when calibrating].) PuH: Measured value (Outputs the measured value when calibrating.)	Last value HOLD	
trhE 0.0	**Transmission output value HOLD when calibrating** Setting range: Measurement range low limit to high limit (*1)(*2)	0.0 (Formazin)	
EPch bEFH	**Transmission output status when adjusting output signal** bEFH: Last value HOLD (Retains the last value before the output signal adjustment, and outputs it.) hEtH: Set value HOLD (Outputs the value set in [Transmission output value HOLD when adjusting output signal].) PuH: Measured value (Outputs the measured value when adjusting output signal.)	Last value HOLD	
EPhE 0.0	**Transmission output value HOLD when adjusting output signal** Setting range: Measurement range low limit to high limit (*1)(*2)	0.0 (Formazin)	

(*1) The measurement unit and decimal point place follow the measurement range.
(*2) If tAon [Kaolin (mg/L)] is selected in [Measurement unit], the Measurement range high limit value will become the value set in [Span setting].

Character	Setting Item, Setting Range	Factory Default	Data
LIGT ----	**Auto-light function** ---- : Disabled USE : Enabled	Disabled	
dISP dPU	**Display selection** Turbidity/SS Display (CH1): Turbidity/SS input value Setting Display (CH2): No indication		

Item	Turbidity/SS Display (CH1)	Setting Display (CH2)
dPU	Turbidity/SS input value	No indication
dA11	Turbidity/SS input value	A11 value
dA12	Turbidity/SS input value	A12 value
dA21	Turbidity/SS input value	A21 value
dA22	Turbidity/SS input value	A22 value
none	No indication	No indication

TIME 00.00	**Indication time** Setting range: 00.00 (Remains lit) 00.01 to 60.00 (Minutes.Seconds)	00.00	
A1oF A11	**A1 output allocation** A11 : A11 type A12 : A12 type A21 : A21 type A22 : A22 type A1AL : A11, A12 types A2AL : A21, A22 types A1A2 : A11, A21 types A2A2 : A12, A22 types ALL : A11, A12, A21, A22 types	A11 type	
oon1 0	**Output ON time when A1 output ON** Setting range: 0 to 9999 seconds	0 seconds	
ooF1 0	**Output OFF time when A1 output ON** Setting range: 0 to 9999 seconds	0 seconds	

***** Inquiries *****

For any inquiries about this unit, please contact our agency or the vendor where you purchased the unit after checking the following.

[Example]

- Model ---------- WIL-101-TU
- Serial number ---------- No. 194F05000

In addition to the above, please let us know the details of the malfunction, or discrepancy, and the operating conditions.

SHINKO TECHNOS CO., LTD.

OVERSEAS DIVISION

Head Office : 2-5-1, Senbahigashi, Minoo, Osaka, Japan

URL: http://www.shinko-technos.co.jp/e/ Tel : +81-72-727-6100

E-mail: overseas@shinko-technos.co.jp Fax: +81-72-727-7006

No. WIL11CTUE3 2019.11