CL

COMPRESSION/TENSION LOAD CELLS

LAUMAS®

Manufactured according to OIML R60 standards

Capacity from 500 kg to 200000 kg

- 17-4 PH STAINLESS STEEL
- BIDIRECTIONAL TENSION AND COMPRESSION
- COMBINED ERROR ≤ ±0.05%
- PROTECTION RATING: IP68 (500 - 60000 kg) - IP67 (100000 - 200000 kg)

CAPACITY kg			NET WEIGHT (kg)	CODE
500	•	•	1.2	CL500
1000	•	•	1.2	CL1000
2000	•	•	1.2	CL2000
5000	•	•	1.7	CL5000
10000	•	•	1.8	CL10000
20000	•	•	4.8	CL20000
30000	•	•	5.3	CL30000
60000	•	•	5.4	CL60000
100000	•	•	12	CL100000
150000	•	•	15	CL150000
200000	•	•	25	CL200000

ON REQUEST

CERTIFICATIONS

Complies with the Eurasian Customs Union regulations

Equivalent of the CE marking for the United Kingdom

CERTIFICATIONS ON REQUEST

Calibration report

LAT Accredia calibration certificate ISO 376 or ASTM E74 for capacities from 1000 kg to 10000 kg

ATEX II 1G 2D *(zone 0-1-2-21-22)* (CE - UKCA)

IECEx *(zone 0-1-2-20-21-22)*

Complies with the Eurasian Customs Union regulations for use in potentially explosive atmospheres

Complies with Chinese market regulations for use in potentially explosive atmospheres

OPTIONS ON REQUEST

	DESCRIPTION
	Two redundant strain gauges Wheatstone bridges (350 Ω) with two output cables; for dual safety systems.

Rev. 0.0

CL

COMPRESSION/TENSION LOAD CELLS

LAUMAS®

DIMENSIONS (mm)

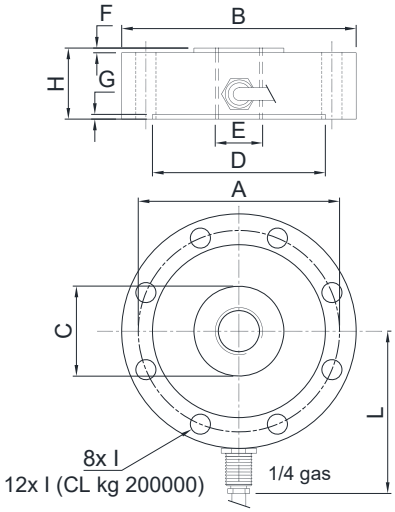

	kg 500 kg 1000 kg 2000	kg 5000 kg 10000	kg 20000 kg 30000 kg 60000	kg 100000	kg 150000	kg 200000
A	Ø 85	Ø 94	Ø 136	Ø 175	Ø 213	Ø 254
B	Ø 99	Ø 109	Ø 164	Ø 219	Ø 249	Ø 299
C	Ø 31	Ø 38	Ø 70	Ø 88	Ø 140	Ø 170
D	Ø 72	Ø 78	Ø 113	Ø 135	Ø 176	Ø 210
E	M20 x1.5	M24 x 2	M48 x 3	M64 x 4	M72 x 4	M90 x 6
F	2	2	5	5	5	5
G	1.5	1.5	2	3	3	3
H	30	35	50	70	70	80
I (•)	Ø 8.5	Ø 8.5	Ø 16.5	Ø 26	Ø 26	Ø 26
L	68.5	73.5	101	128.5	143.5	168.5
Weight	1.1	1.4	5	11	16	26

For the load cell fixing screws (•), provide the tightening torque indicated in the table

Screw	M8				M16				M24			
Screw class	6.8	A2-70	8.8	A2-80	6.8	A2-70	8.8	A2-80	6.8	A2-70	8.8	A2-80
Tightening torque	15 Nm		20 Nm		120 Nm		160 Nm		400 Nm		550 Nm	

for capacities of 10000, 30000, 60000, 150000, 200000 kg use screws of class 8.8 or higher

TECHNICAL FEATURES

Material	17-4 PH stainless steel
Nominal load (E max)	500 - 1000 - 2000 - 5000 - 10000 - 20000 - 30000 - 60000 - 100000 - 150000 - 200000 kg
Combined error	≤±0.05%
Protection rating	IP68 (500 - 60000 kg), IP67 (100000 - 200000 kg)

Rated output	2 mV/V ±0.3%	Input resistance	700 Ω ±20
Temperature effect on zero	0.005% °C	Output resistance	700 Ω ±5
Temperature effect on span	0.005% °C	Zero balance	±1%
Compensated temperature range	-20 °C / +70 °C	Insulation resistance	>5000 MΩ
Operating temperature range	-30 °C / +90 °C	Safe overload (% of full scale)	150%
Creep at nominal load in 30 minutes	0.3%	Ultimate overload (% of full scale)	300%
Max supply voltage without damage	15 V	Deflection at nominal load	0.3 mm

ELECTRICAL CONNECTIONS

Cable length	5 m
Cable diameter	5 mm
Cores	6 x 0.14 mm²

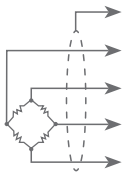

SHIELD	
+ SIGNAL	GREEN
+ EXCITATION + REF./SENSE	RED BLUE
- SIGNAL	WHITE
- EXCITATION - REF./SENSE	BLACK BROWN/YELLOW

The Company reserves the right to make changes to the technical data, drawings and images without notice.

Rev. 0.0